SHEETS CONTENT:

SHEET #1 INDEX, COVER SHEET & GENERAL NOTES
SHEET #2 ASSEMBLY ELEVATIONS No 1, 2, 3.
SHEET #3 ASSEMBLY ELEVATIONS No 7, 7-EMB.
SHEET #3A MAX. DESIGN PRESSURE RATING SCHEDULE (PSF)
SHEET #4 OPTIONAL EMBOSSED DOOR SHEET CONFIGURATIONS.
SHEET #5 HORIZONTAL SECTIONS A-A & B-B.
SHEET #6 HORIZONTAL SECTIONS C-C & C'-C'.
SHEET #7 VERTICAL SECTIONS D-D, E, F, G, H, I AND HORIZONTAL SECTION J-J
SHEET #8 MODEL 1500-A AIR LOUVER DETAILS.
SHEET #9 FRAME SECTIONS, & REINFORCING DETAILS AND THRESHOLD DETAIL
SHEET #10 TYPICAL DOOR SECTION, "Z" ASTRAGAL & ASA STRIKE REINFORCING
SHEET #11 MULLION INSTALLATION DETAILS.
SHEET #12 SURFACE BOLT INSTALLATION AND DETAILS.
SHEET #13 DOOR TOP AND BOTTOM TYPICAL END CHANNEL DETAIL.
DOOR SURFACE CLOSER REINFORCEMENT DETAIL.
DOOR SURFACE CLOSER AND END CHANNEL ASSEMBLY.
SHEET #14 DOOR SNAP IN TOP CAP DETAILS.
SHEET #15 HINGE BAR REINFORCING FOR DOOR
ANSI #A115.1 #86 MORTISE LOCK/RIM PANIC REINFORCING
DOOR SURFACE BOLT REINFORCING DETAIL.
SHEET #16 #161 CYLINDRICAL LOCK AND DEAD BOLT REINFORCEMENT DETAIL.
SHEET #17 ANCHOR DETAILS.
SHEET #18 ANCHOR SCHEDULE.
WIRE ANCHOR DETAIL.
2 PIECES COMBINATION STUD ANCHOR DETAIL.
EMA BUTTERFLY ANCHOR DETAIL.
SHEET #19 BILL OF MATERIALS.

MAX. A.S.D. DESIGN PRESSURE RATINGS (psf) REQUIREMENTS FOR ASSEMBLIES.

SEE SHEETS 2 & 3 FOR ASSEMBLY DEFINITIONS

ASSEMBLY #	WHERE WATER INFILTRATION REQUIREMENT IS NEEDED **	WHERE WATER INFILTRATION REQUIREMENT IS NOT NEEDED (NON HABITABLE AREAS)
1	+ 65, − 65	+ 65, − 65
2	+ 65, − 65	+ 65, − 65
3	+ 65, − 65	+ 65, − 65
7	+ 65, − 53.3	+ 65, − 53.3
7-EMB	+ 65, − 53.3	+ 65, − 53.3

** APPROVED ONLY WHEN CANOPY IS PROVIDED IMMEDIATELY ABOVE THE DOOR LOCATION COVERING THE ENTIRE WIDTH OF THE DOOR AND PROJECTING OUT A DISTANCE EQUAL OR LARGER THAN THE DOOR'S HEIGHT.
NOT APPROVED IF THE ABOVE CONDITION IS NOT COMPLIED WITH.

THIS DOOR WAS NOT TESTED FOR AIR INFILTRATION

THIS DRAWING SHALL ONLY BE USED TO OBTAIN PERMITS IN THE STATE OF FLORIDA

GENERAL NOTES AND SPECIFICATIONS:

1. DOUBLE & SINGLE SERIES LS18 FLUSH/EMBOSSED OUTSWING COMMERCIAL STEEL DOOR W/SERIES "AS" 16 GAGE STEEL FRAME LOUVERED ASSEMBLIES, SHOWN ON THIS PRODUCT EVALUATION DOCUMENT (P.E.D.) HAS BEEN VERIFIED FOR CODE COMPLIANCE IN ACCORDANCE WITH THE **2026 (9th EDITION)** OF THE FLORIDA BUILDING CODE. DOOR MAY BE INSTALLED AT HIGH VELOCITY HURRICANE ZONES (MIAMI-DADE / BROWARD COUNTIES).
DESIGN WIND LOADS SHALL BE DETERMINED AS PER SECTION **1620** OF THE ABOVE MENTIONED CODES, USING **ASCE 7-22** AND SHALL NOT EXCEED THE MAXIMUM (A.S.D.) DESIGN PRESSURE RATINGS INDICATED ON SHEETS 1 & 3A.
IN ORDER TO VERIFY THE ABOVE CONDITION, ULTIMATE DESIGN WIND LOADS DETERMINED PER **ASCE 7-22** SHALL FIRST BE REDUCED TO A.S.D. DESIGN WIND LOADS BY MULTIPLYING THEM BY 0.6 IN ORDER TO COMPARE THESE WITH MAX. (A.S.D.) DESIGN PRESSURE RATINGS INDICATED ON SHEETS 1 & 3A.

IN ORDER TO VERIFY THAT COMPONENTS AND ANCHORS ON THIS P.A.D., AS TESTED, WERE NOT OVER STRESSED, A 33% INCREASE IN ALLOWABLE LOADS FOR WIND LOADS WAS NOT USED IN THEIR ANALYSIS. HOWEVER, FASTENER SPACING TO WOOD HAS BEEN DETERMINED IN ACCORDANCE WITH **ANSI/AWC NDS-2024.**
THIS DOOR'S ADEQUACY FOR WIND AND IMPACT LOAD HAS BEEN VERIFIED IN ACCORDANCE WITH SECTION 1626 OF THE ABOVE MENTIONED CODE AS PER PROTOCOLS TAS-201, TAS-202, TAS-203 AS PER HURRICANE TEST LABORATORY REPORT #0279-0719-03 AND AS PER SUBMITTED STRUCTURAL CALCULATIONS, PERFORMED AS PER SECTION **1616** OF THE FLORIDA BUILDING CODE.

2. ALL COMPONENTS SHALL BE AS SPECIFIED ON APPLICABLE DETAIL SHEETS AND AT BILL OF MATERIALS (SHEET 19) OF THIS DRAWING.

3. COMPLIANCE OF EGRESS / ESCAPE REQUIREMENTS OF THESE DOORS PER FBC SHALL BE DETERMINED BY BUILDING OFFICIALS ON A CASE-BY-CASE BASIS.

4. ALL SCREWS USED FOR ASSEMBLY CONNECTIONS (METAL TO METAL) SHALL BE STAINLESS STEEL 304 OR 316 AISI SERIES OR CORROSION RESISTANT COATED CARBON STEEL AS PER DIN 50018 WITH 50 ksi YIELD POINT AND 90 ksi TENSILE STRENGTH & SHALL COMPLY WITH FLORIDA BUILDING CODE SECTIONS 2411.3.3.4 & 1711.

5. ALL WELDING SHALL CONFORM WITH AMERICAN WELDING SOCIETY A.W.S. D.1.3 AND D-19.0 REGULATIONS. USE E 60XX ELECTRODES.

6. ALL ANCHORS FOR DOOR FRAME CONNECTIONS TO EXISTING STRUCTURE SHALL BE AS SPECIFIED ON SHEET 17 OF THIS DRAWING. MAXIMUM ANCHOR SPACINGS SHALL BE AS PER SCHEDULE ON SHEET 18 AND ELEVATIONS ON SHEETS 2 & 3 OF THIS DRAWING. SEE SHEET 2, 3 & 7 FOR THRESHOLD ANCHORS, AND SHEET 11 FOR MULLION ANCHORS. ALL ANCHORS SHALL COMPLY WITH SECTION 1711 OF THE FLORIDA BUILDING CODE.

7. PROVIDE MAX. LOAD BEARING SHIM SPACE AS INDICATED ON SHEETS 5, 6, 7 & 17 OF 19.

8. **THIS DOOR WILL NOT REQUIRE A HURRICANE PROTECTION DEVICE.**

9. SEE MAX. A.S.D. DESIGN PRESSURE RATING REQUIREMENTS FOR WATER INFILTRATION AND LIMITATIONS FOR AIR INFILTRATION FOR ASSEMBLIES ON THIS SHEET.

10. PROVIDE SPECIFIED SEALANT AT ALL DOOR FRAMES, THRESHOLD AND VISION LITE COMPONENTS INDICATED ON THIS DRAWING.

11. (a) THIS PRODUCT EVALUATION DOCUMENT (P.E.D.) PREPARED BY THIS ENGINEER IS GENERIC AND DOES NOT PROVIDE INFORMATION FOR A SITE SPECIFIC PROJECT; i.e. WHERE THE SITE CONDITIONS DEVIATE FROM THE P.E.D.

(b) THE CONTRACTOR IS TO BE RESPONSIBLE FOR THE SELECTION, PURCHASE AND INSTALLATION INCLUDING LIFE SAFETY OF THIS PRODUCT, BASED ON THIS P.E.D., PROVIDED HE/SHE DOES NOT DEVIATE FROM THE CONDITIONS DETAILED ON THIS DOCUMENT. CONSTRUCTION SAFETY AT SITE IS THE CONTRACTOR'S RESPONSIBILITY.

(c) THIS PRODUCT EVALUATION DOCUMENT (P.E.D.) WILL BE CONSIDERED INVALID IF ALTERED BY ANY MEANS.

(d) SITE SPECIFIC PROJECTS SHALL BE PREPARED BY A FLORIDA REGISTERED ENGINEER OR ARCHITECT WHO WILL BECOME THE ENGINEER OF RECORD (E.O.R.) FOR THE PROJECT AND WHO WILL BE RESPONSIBLE FOR THE PROPER USE OF THE P.E.D.

(e) ORIGINAL P.E.D. SHALL BEAR THE DATE, SEAL AND SIGNATURE OF THE PROFESSIONAL ENGINEER OF RECORD WHO PREPARED IT.

12. PRODUCT MANUFACTURER'S LABEL SHALL BE LOCATED AT A READILY VISIBLE LOCATION ON THE DOOR. ONE LABEL SHALL PLACED FOR EVERY OPENING. LABELING SHALL COMPLY WITH SECTION 1709.5 OF THE FLORIDA BUILDING CODE.

FLORIDA BUILDING CODE (HIGH VELOCITY HURRICANE ZONE)

WALTER A. TILLIT JR. LICENSE No. 44167 STATE OF FLORIDA PROFESSIONAL ENGINEER

P.E. SEAL/SIGNATURE/DATE

©2026 TILTECO, INC.

TILTECO INC.
TILLIT TESTING & ENGINEERING COMPANY
6355 N.W. 36th. St., Ste. 305, VIRGINIA GARDENS, Fl. 33166
Phone : (305)871-1530 . Fax : (305)871-1531
e-mail: tilteco@aol.com
CA-0006719
WALTER A. TILLIT Jr. P.E.
FLORIDA Lic. # 44167

DOUBLE & SINGLE SERIES LS18 OUTSWING COMMERCIAL STEEL DOOR W/SERIES "AS" 16 GAGE STEEL FRAME LOUVERED ASSEMBLIES.

DAYBAR INDUSTRIES LTD
50 WEST DRIVE, BRAMPTON, ON CANADA, L6T 2J4
TEL: 905 625-8000
FAX: 905 625-4204

REV. No	DESCRIPTION	DATE	REV. No	DESCRIPTION	DATE
1	OLD 23-180	08/04/2026	3		
2			4		

W.H.
DRAWN BY

08/04/2026
DATE

26-242
DRAWING No

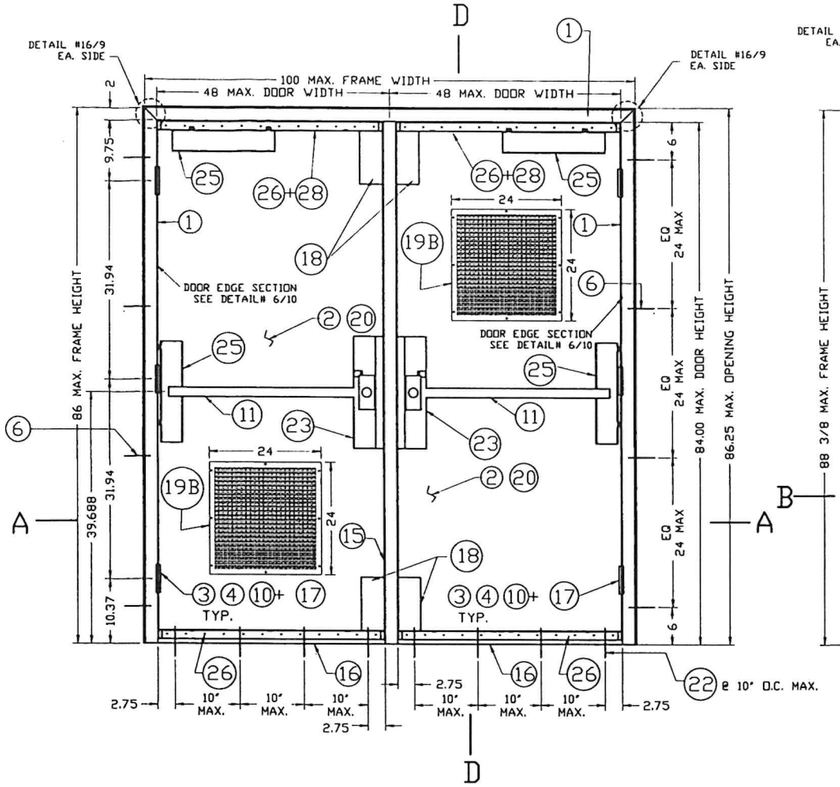

ASSEMBLY #1, * INTERIOR ELEVATION
PAIR OF OUTSWING DOORS
WALL CONDITION : MASONRY
ANCHORS: WIRE (6) DETAIL #21
VON DUPRIN 98/99L TRIM SERIES RIM EXIT (11)
AT BOTH DOORS
4 1/2" HAGER MODEL #BB1168 STEEL BUTT HINGE AND
4 1/2" STANLEY MODEL #FBB168 STEEL BUTT HINGE (10)
VON DUPRIN 9954 REMOVABLE MULLION (15)
(FOR DOUBLE DOOR ONLY)
DOOR CORE ITEM (20) : EXPANDED POLYSTYRENE OR HONEYCOMB
PAPER OR 1.5PCF POLYURETHANE OR 12.5PCF MINERAL BOARD
FULL FLUSH
AIR LOUVER INC. METAL LOUVER #1500A (19B), W/24"x24"
(DOOR CUTOUT) AND LOCATED AT 12" CLEAR FROM TOP OR
BOTTOM OF DOOR AND CENTERED W/ DOOR

OUTSWING SINGLE & DOUBLE DOORS
W/ VON DUPRIN RIM PANIC DEVICES

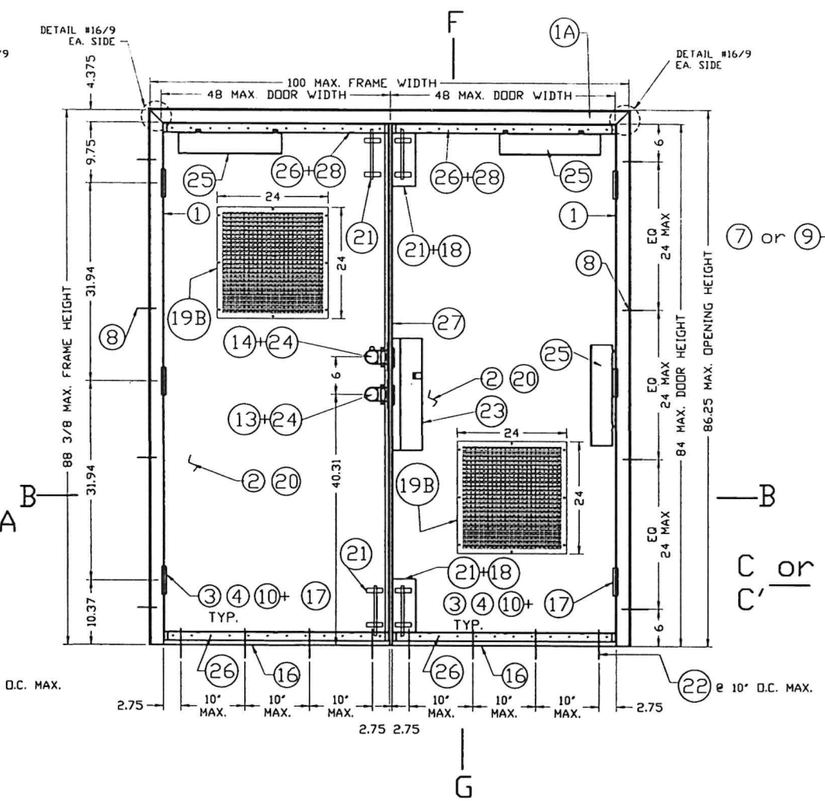

ASSEMBLY #2, * INTERIOR ELEVATION
PAIR OF OUTSWING DOORS
WALL CONDITION : MASONRY
ANCHORS: EMA EXISTING MASONRY ANCHOR DET. #22
SCH-D SERIES CYLINDRICAL LOCK (13) +SCH-B SERIES DEAD BOLT (14)
HAGER #275D SURFACE BOLTS (21) (TOP & BOTTOM) AT
TWO DOORS
4 1/2" HAGER MODEL #BB1279 STEEL BUTT HINGE AND
4 1/2" STANLEY MODEL #FB179 STEEL BUTT HINGE (10)
"Z" ASTRAGAL (27) W/ ASA STRIKE
FOR CYLINDRICAL LOCK AND DEAD BOLT STRIKE
DOOR CORE (20) : EXPANDED POLYSTYRENE OR HONEYCOMB PAPER OR
1.5PCF POLYURETHANE OR 12.5PCF MINERAL BOARD
FULL FLUSH
AIR LOUVER INC. METAL LOUVER #1500A (19B), W/24"x24"
(DOOR CUTOUT) AND LOCATED AT 12" CLEAR FROM TOP OR
BOTTOM OF DOOR AND CENTERED W/ DOOR

OUTSWING SINGLE DOOR W/ TWO SURFACE BOLTS
& DOUBLE DOORS W/ FOUR SURFACE BOLTS

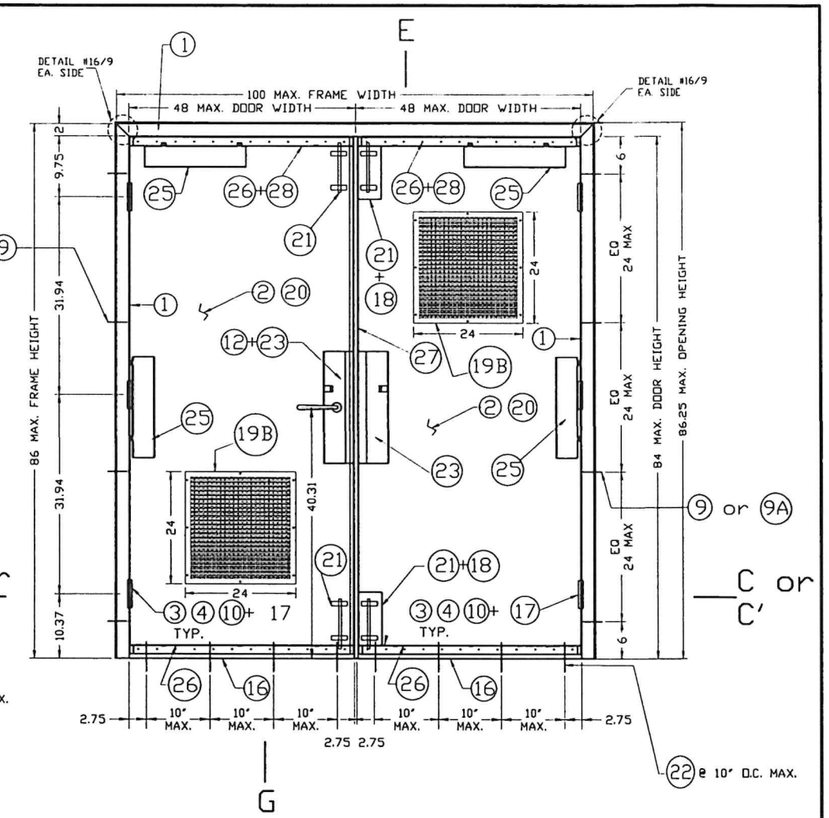

ASSEMBLY #3, * INTERIOR ELEVATION
PAIR OF OUTSWING DOORS
WALL CONDITION : WOOD STUDS
ANCHORS: 2 PIECE COMBINATION STUD ANCHOR (7) DETAIL #20
OR CARRIAGE BOLT (9A) W/ EMA (DET. #22A) OR WOOD SCREW
LAG BOLT (9) W/ EMA (DETAIL #22B)
SCH-L9000 SERIES #86 MORTISE LOCK (12) (W/ DEAD BOLT INCLUDED)
HAGER #275D SURFACE BOLTS (21) (TOP & BOTTOM) AT TWO DOORS
4 1/2" HAGER MODEL #BB1279 STEEL BUTT HINGE AND
4 1/2" STANLEY MODEL #FB179 STEEL BUTT HINGE (10)
"Z" ASTRAGAL (27) W/ ASA STRIKE FOR MORTISE LOCK.
DOOR CORE (20): EXPANDED POLYSTYRENE OR HONEYCOMB PAPER OR
1.5PCF POLYURETHANE OR 12.5PCF MINERAL BOARD
FULL FLUSH
AIR LOUVER INC. METAL LOUVER #1500A (19B), W/24"x24"
(DOOR CUTOUT) AND LOCATED AT 12" CLEAR FROM TOP OR
BOTTOM OF DOOR AND CENTERED W/ DOOR

OUTSWING SINGLE DOOR W/ TWO SURFACE BOLTS
& DOUBLE DOORS W/ FOUR SURFACE BOLTS

ASSEMBLY ELEVATIONS #1, 2 & 3

SEE SECTIONS ON SHEETS 4, 5, 6 & 7

FLORIDA BUILDING CODE (HIGH VELOCITY HURRICANE ZONE)

- SEE SHEET 1 FOR MAXIMUM A.S.D. DESIGN PRESSURE RATING FOR EACH ASSEMBLY. BASED ON WATER INFILTRATION REQUIREMENTS AND AIR INFILTRATION LIMITATIONS.
- SEE SHEET 3A FOR MAXIMUM A.S.D. DESIGN PRESSURE RATING SCHEDULE FOR ASSEMBLY COMBINATIONS. BASED ON WATER INFILTRATION REQUIREMENTS AND AIR INFILTRATION LIMITATIONS.

WALTER A. TILLIT JR. LICENSE No. 44167 STATE OF FLORIDA PROFESSIONAL ENGINEER
8/7/2026
P.E. SEAL/SIGNATURE/DATE

©2026 TILTECO, INC.

TILTECO INC.
TILLIT TESTING & ENGINEERING COMPANY
6355 N.W. 36th. St., Ste. 305, VIRGINIA GARDENS, Fl. 33166
Phone : (305)871-1530 . Fax : (305)871-1531
e-mail: tilteco@aol.com
CA-0006719
WALTER A. TILLIT Jr. P.E.
FLORIDA Lic. # 44167

DOUBLE & SINGLE SERIES LS18 OUTSWING COMMERCIAL STEEL DOOR W/SERIES "AS" 16 GAGE STEEL FRAME LOUVERED ASSEMBLIES.

DAYBAR INDUSTRIES LTD
50 WEST DRIVE, BRAMPTON, ON CANADA, L6T 2J4
TEL: 905 625-8000
FAX: 905 625-4204

REV. No	DESCRIPTION	DATE	REV. No	DESCRIPTION	DATE
1	OLD 23-180	08/04/2026	3		
2			4		

W.H.
DRAWN BY

08/04/2026
DATE

26-242
DRAWING No

SHEET 2 OF 19

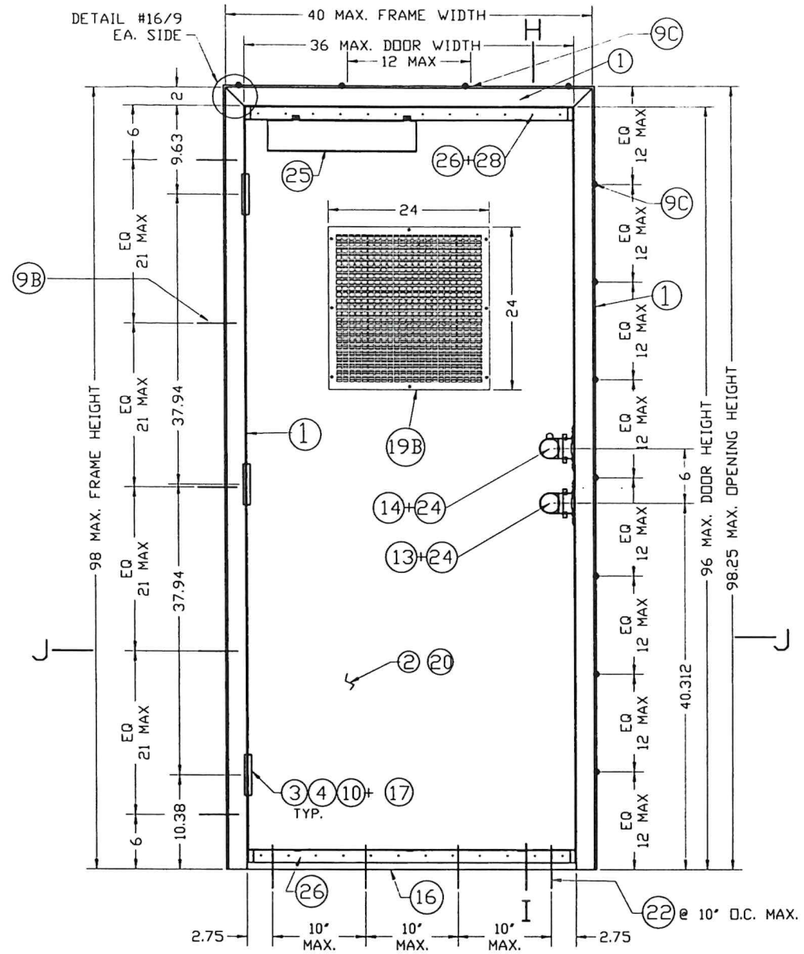

ASSEMBLY #7 * EXTERIOR ELEVATION
SINGLE DOOR OUTSWING
WALL CONDITION - WELDED HOT ROLLED
3/8" MIN. THICK STRUCTURAL STEEL CHANNEL FRAME JAMB AND HEAD.
ANCHORS:3/8"x3 1/2" FLAT HEAD MACHINE SCREW, LOCK WASHER & NUT W/ EMA (DET #23A), OR FRAME (1) WELDED @ 12" O.C. AT JAMB AND HEAD INCLUDING TOP & BOTTOM OF JAMB (DET #23B).
SCH-D SERIES CYLINDRICAL LOCK (13)+ SCH-B SERIES DEAD BOLT (14)
4 1/2" HAGER MODEL # BB1279 STEEL BUTT HINGE (10)
DOOR CORE (20): EXPANDED POLYSTYRENE OR HONEYCOMB PAPER OR 1.5PCF POLYURETHANE OR 12.5PCF MINERAL BOARD. FULL FLUSH
AIR LOUVER INC., METAL LOUVER #1500-A (19B), W/ 24"x24" DOOR CUT-OFF, AND LOCATED AT 12" FROM TOP OF DOOR TO TOP OF LOUVER

OUTSWING SINGLE DOORS WITHOUT SURFACE BOLTS

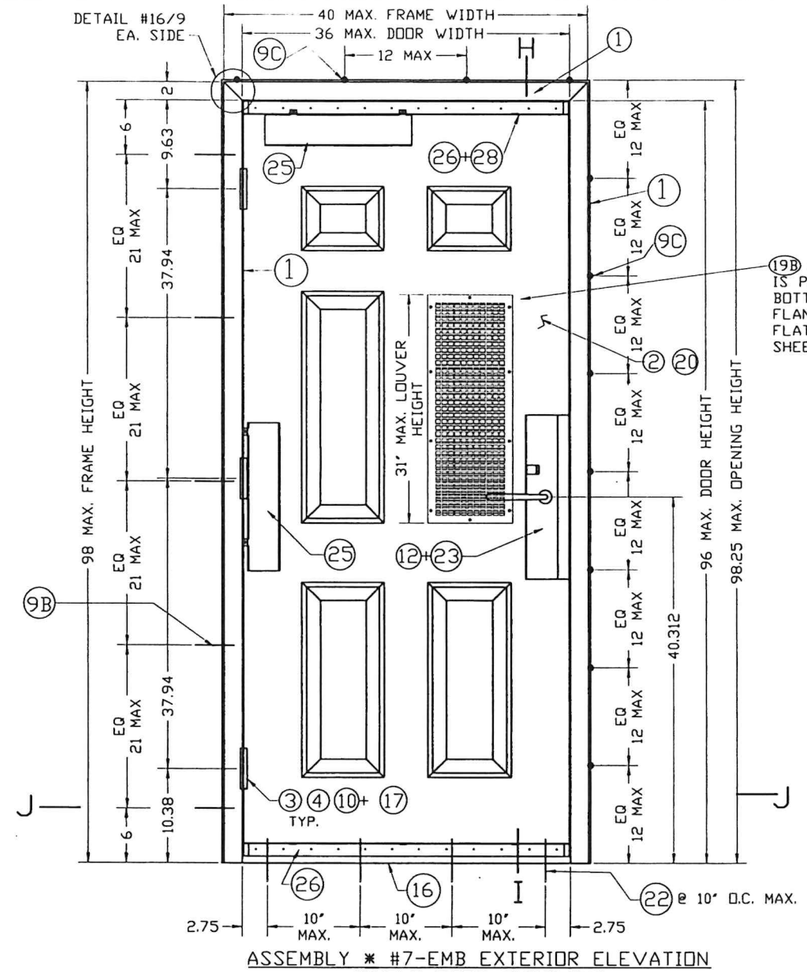

ASSEMBLY * #7-EMB EXTERIOR ELEVATION
SINGLE DOOR OUTSWING
WALL CONDITION - WELDED HOT ROLLED
STRUCTURAL STEEL CHANNEL FRAME JAMB AND HEAD.
ANCHORS:3/8"x3 1/2" FLAT HEAD MACHINE SCREW, LOCK WASHER & NUT W/ EMA (DET #23A), OR FRAME (1) WELDED @ 12" O.C. AT JAMB AND HEAD INCLUDING TOP & BOTTOM OF JAMB (DET #23B).
SCH-L SERIES #86 MORTISE LOCK (12) W/ DEAD BOLT INCLUDED.
4 1/2" HAGER MODEL # BB1279 STEEL BUTT HINGE (10)
DOOR CORE (20): EXPANDED POLYSTYRENE OR HONEYCOMB PAPER OR 1.5PCF POLYURETHANE OR 12.5PCF MINERAL BOARD. FULL EMBOSSED
AIR LOUVER INC., METAL LOUVER #1500-A (19B), W/ 24"x24" DOOR CUT-OFF, AND LOCATED AT 12" FROM TOP OF DOOR TO TOP OF LOUVER

OUTSWING SINGLE DOORS WITHOUT SURFACE BOLTS

FLORIDA BUILDING CODE (HIGH VELOCITY HURRICANE ZONE)

ASSEMBLY ELEVATIONS
#7, 7-EMB
SEE SECTIONS ON SHEET 7

- SEE SHEET 1 FOR MAXIMUM A.S.D. DESIGN PRESSURE RATING FOR EACH ASSEMBLY. BASED ON WATER INFILTRATION REQUIREMENTS AND AIR INFILTRATION LIMITATIONS.
- SEE SHEET 3A FOR MAXIMUM A.S.D. DESIGN PRESSURE RATING SCHEDULE FOR ASSEMBLY COMBINATIONS. BASED ON WATER INFILTRATION REQUIREMENTS AND AIR INFILTRATION LIMITATIONS.

WALTER A. TILLIT JR. LICENSE No. 44167 STATE OF FLORIDA PROFESSIONAL ENGINEER

SEAL/SIGNATURE/DATE

©2026 TILTECO, INC.

TILTECO INC.
TILLIT TESTING & ENGINEERING COMPANY
6355 N.W. 36th. St., Ste. 305, VIRGINIA GARDENS, Fl. 33166
Phone : (305)871-1530 . Fax : (305)871-1531
e-mail: tilteco@aol.com
CA-0006719
WALTER A. TILLIT Jr. P.E.
FLORIDA Lic. # 44167

DOUBLE & SINGLE SERIES LS1B OUTSWING COMMERCIAL STEEL DOOR W/SERIES "AS" 16 GAGE STEEL FRAME LOUVERED ASSEMBLIES.

DAYBAR INDUSTRIES LTD
50 WEST DRIVE, BRAMPTON, ON CANADA, L6T 2J4
TEL: 905 625-8000
FAX: 905 625-4204

REV. No	DESCRIPTION	DATE	REV. No	DESCRIPTION	DATE
1	OLD 23-180	08/04/2026	3		
2			4		

W.H.
DRAWN BY

08/04/2026
DATE

26-242
DRAWING No

SHEET 3 OF 19

MAX. A.S.D. DESIGN PRESSURE RATING (psf.) SCHEDULE FOR INSTALLATIONS COMBINING ASSEMBLIES #1 THRU #7-EMB BETWEEN EACH OTHER FOR A GIVEN ANCHOR JAMB TYPE *, **

ITEM (SEE SHEET 19 FOR B.O.M.).	ANCHOR SPECIFICATIONS AT JAMBS *	ASSEMBLY #1 (SEE SHEET 2) **	ASSEMBLY #2 (SEE SHEET 2) **	ASSEMBLY #3 (SEE SHEET 2) **	ASSEMBLY #7 (SEE SHEET 3) **	ASSEMBLY #7-EMB (SEE SHEET 3) **
6	0.157" DIA.x9 1/2" LONG WIRE ANCHOR (SEE DETAIL 21/17)	+65, -65	+65, -65	+65, -65	+65, -53.3	+65, -53.3
7	2 PIECE COMBINATION STUD ANCHOR (SEE DETAIL 20/17)	+65, -65	+65, -65	+65, -65	+65, -53.3	+65, -53.3
8	EXISTING MASONRY ANCHOR & E.M.A. (SEE DETAIL 22/17)	+65, -65	+65, -65	+65, -65	+65, -53.3	+65, -53.3
9	EXISTING WOOD BUCK ANCHOR W/WOOD SCREW LAG BOLT & E.M.A. (SEE DETAIL 22A/17)	+65, -65	+65, -65	+65, -65	+65, -53.3	+65, -53.3
9A	EXISTING WOOD BUCK ANCHOR W/ STEEL CARRIAGE BOLT & E.M.A. (SEE DETAIL 22B/17)	+65, -65	+65, -65	+65, -65	+65, -53.3	+65, -53.3
9B	CHANNEL IRON THROUGH BOLTING W/3/8" x 3 1/2" STEEL FLAT HEAD MACHINE SCREW & E.M.A. (SEE DETAIL 23A/17)	+65, -53.3	+65, -53.3	+65, -53.3	+65, -53.3	+65, -53.3
9C	CHANNEL IRON W/3/8" STITCH WELD (SEE DETAIL 23B/17)	+65, -53.3	+65, -53.3	+65, -53.3	+65, -53.3	+65, -53.3

* NOTES ON FRAME HEAD REQUIREMENTS

1. FOR SINGLE & DOUBLE DOORS INSTALLED AT WOOD FRAME BUILDINGS, DOOR HEADS SHALL BE CONTINUOUSLY RETAINED BY EXISTING BUILDINGS WOOD HEADER FOLLOWING DETAILS AS PER SECTION E, SHEET 7.

2. FOR SINGLE & DOUBLE DOORS INSTALLED AT STEEL FRAME BUILDINGS, DOOR HEADS SHALL BE CONTINUOUSLY WELDED TO EXISTING BUILDINGS STEEL FRAME HEADER FOLLOWING DETAILS AS PER SECTION H, SHEET 7 & DETAIL 23B ON SHEET 17.

3. FOR SINGLE & DOUBLE DOORS INSTALLED AT CONCRETE /MASONRY BUILDINGS, DOOR HEADS NEED NOT BE ATTACHED TO EXISTING BUILDINGS HEADER. APPLICABLE TO SECTIONS D & F, SHEET 7.

** NOTES ON WATER AND AIR INFILTRATION REQUIREMENTS AND LIMITATIONS

1. SEE GENERAL NOTE 9 ON SHEET 1 OF 19 FOR REQUIREMENTS AND LIMITATIONS

FLORIDA BUILDING CODE (HIGH VELOCITY HURRICANE ZONE)

WALTER A. TILLIT JR. LICENSE No 44167 STATE OF FLORIDA PROFESSIONAL ENGINEER

P.E. SEAL/SIGNATURE/DATE

©2026 TILTECO, INC.

TILTECO INC.
TILLIT TESTING & ENGINEERING COMPANY
6355 N.W. 36th. St., Ste. 305, VIRGINIA GARDENS, Fl. 33166
Phone : (305)871-1530 . Fax : (305)871-1531
e-mail: tilteco@aol.com
CA-0006719
WALTER A. TILLIT Jr. P.E.
FLORIDA Lic. # 44167

DOUBLE & SINGLE SERIES LS18 OUTSWING COMMERCIAL STEEL DOOR W/SERIES "AS" 16 GAGE STEEL FRAME LOUVERED ASSEMBLIES.

DAYBAR INDUSTRIES LTD
50 WEST DRIVE, BRAMPTON, ON CANADA, L6T 2J4
TEL: 905 625-8000
FAX: 905 625-4204

REV. No	DESCRIPTION	DATE	REV. No	DESCRIPTION	DATE
1	OLD 23-180	08/04/2026	3		
2			4		

W.H.
DRAWN BY

08/04/2026
DATE

26-242
DRAWING No

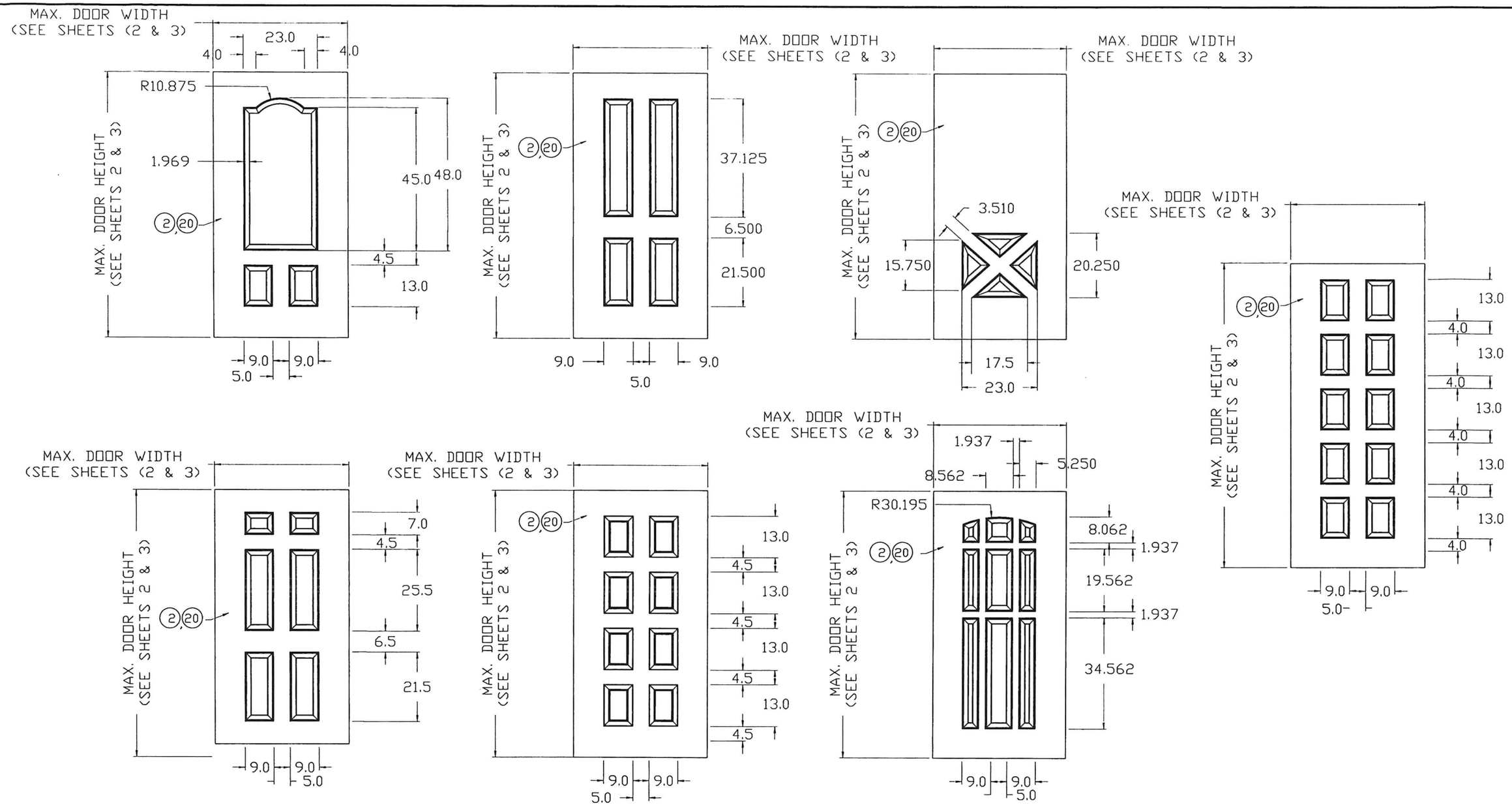

OPTIONAL EMBOSSED DOOR SLAB W/ LOUVERS SHEET CONFIGURATIONS

FLORIDA BUILDING CODE (HIGH VELOCITY HURRICANE ZONE)

NOTE:
EMBOSSED DOORS W/ LOUVERS PERMITTED IN SINGLES & PAIRS LIMITED TO DESIGN PRESSURES NOTED FOR EACH ASSEMBLY

WALTER A. TILLIT JR. LICENSE No. 44167 STATE OF FLORIDA PROFESSIONAL ENGINEER

P.E. SEAL/SIGNATURE/DATE

©2026 TILTECO, INC.

TILTECO INC.
TILLIT TESTING & ENGINEERING COMPANY
6355 N.W. 36th. St., Ste. 305, VIRGINIA GARDENS, Fl. 33166
Phone : (305)871-1530 . Fax : (305)871-1531
e-mail: tilteco@aol.com
CA-0006719
WALTER A. TILLIT Jr. P.E.
FLORIDA Lic. # 44167

DOUBLE & SINGLE SERIES LS18 OUTSWING COMMERCIAL STEEL DOOR W/SERIES "AS" 16 GAGE STEEL FRAME LOUVERED ASSEMBLIES.

DAYBAR INDUSTRIES LTD
50 WEST DRIVE, BRAMPTON, ON CANADA, L6T 2J4
TEL: 905 625-8000
FAX: 905 625-4204

REV. No	DESCRIPTION	DATE	REV. No	DESCRIPTION	DATE
1	OLD 23-180	08/04/2026	3		
2			4		

W.H.
DRAWN BY

08/04/2026
DATE

26-242
DRAWING No

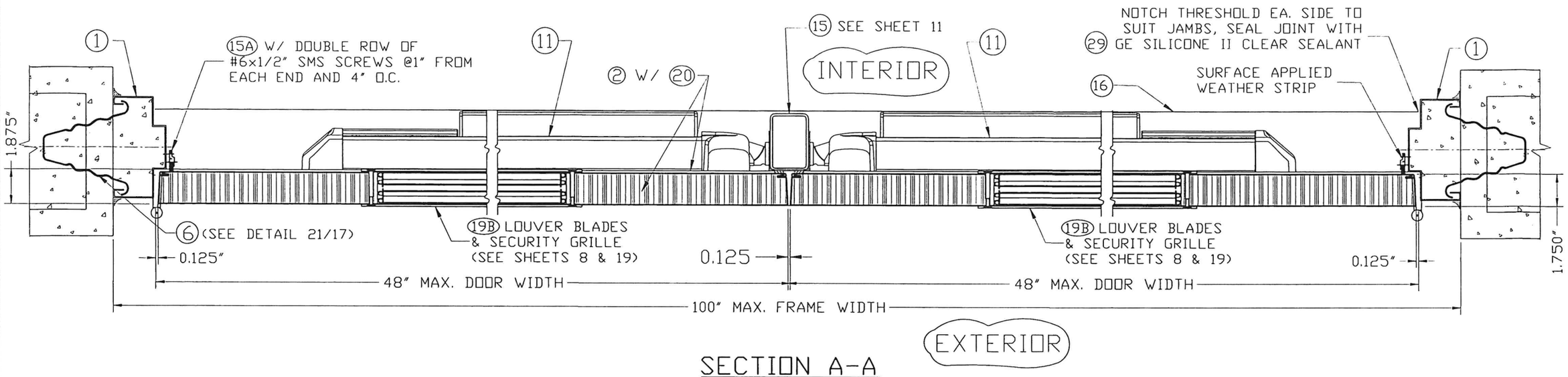

SECTION A-A

SCALE: 3/16"=1"

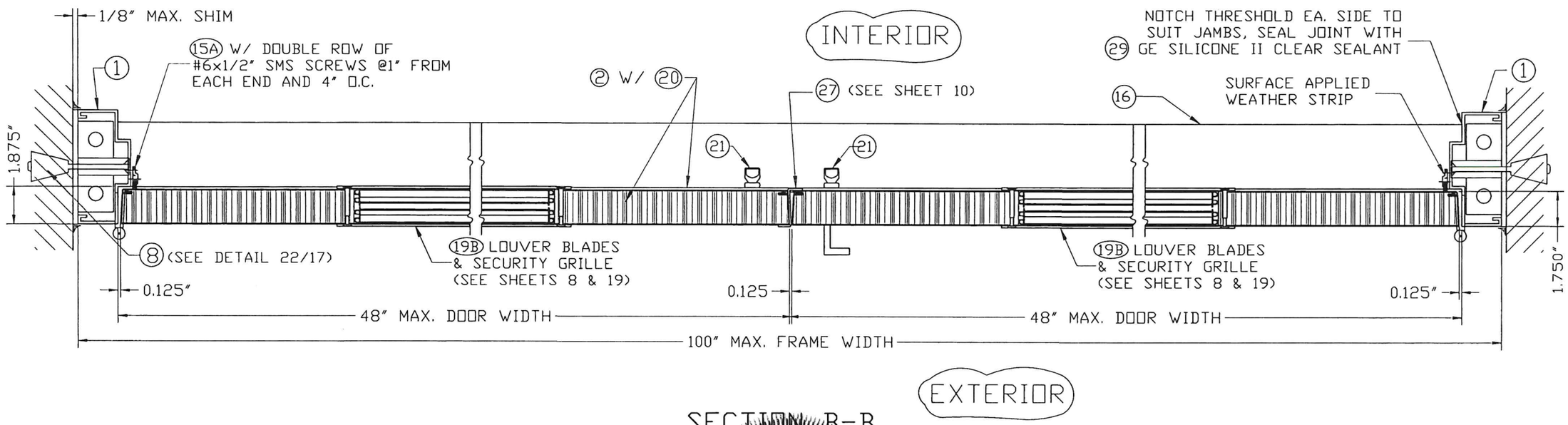

SECTION B-B

SCALE: 3/16"=1"

WALTER A. TILLIT, JR. LICENSE No. 44167 STATE OF FLORIDA PROFESSIONAL ENGINEER

7/2026

P.E. SEAL/SIGNATURE/DATE

FLORIDA BUILDING CODE (HIGH VELOCITY HURRICANE ZONE)

©2026 TILTECO, INC.

TILTECO INC.
TILLIT TESTING & ENGINEERING COMPANY
6355 N.W. 36th. St., Ste. 305, VIRGINIA GARDENS, Fl. 33166
Phone : (305)871-1530 . Fax : (305)871-1531
e-mail: tilteco@aol.com
CA-0006719
WALTER A. TILLIT Jr. P.E.
FLORIDA Lic. # 44167

DOUBLE & SINGLE SERIES LS18 OUTSWING COMMERCIAL STEEL DOOR W/SERIES "AS" 16 GAGE STEEL FRAME LOUVERED ASSEMBLIES.

DAYBAR INDUSTRIES LTD

50 WEST DRIVE, BRAMPTON, ON CANADA, L6T 2J4
TEL: 905 625-8000
FAX: 905 625-4204

REV. No	DESCRIPTION	DATE	REV. No	DESCRIPTION	DATE
1	OLD 23-180	08/04/2026	3		
2			4		

W.H.
DRAWN BY

08/04/2026
DATE

26-242
DRAWING No

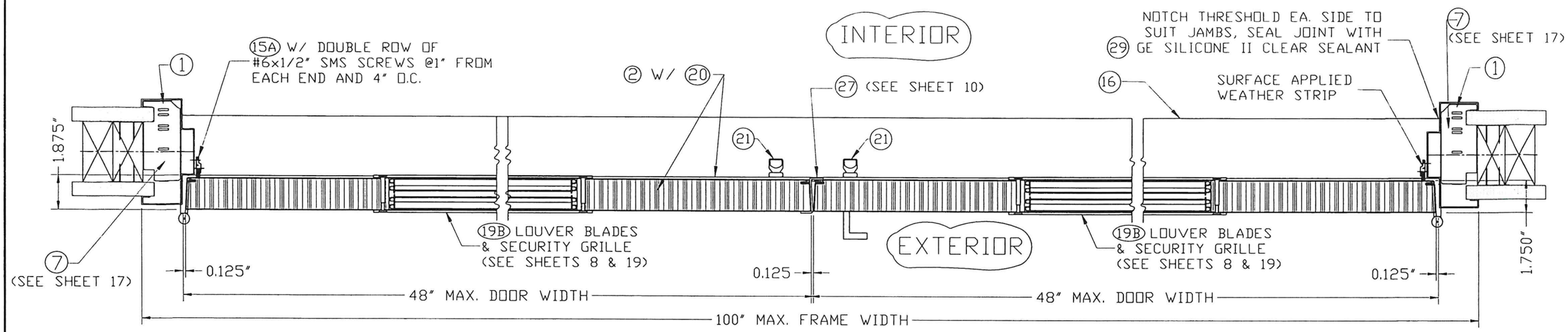

SECTION C-C

SCALE: 3/16"=1"

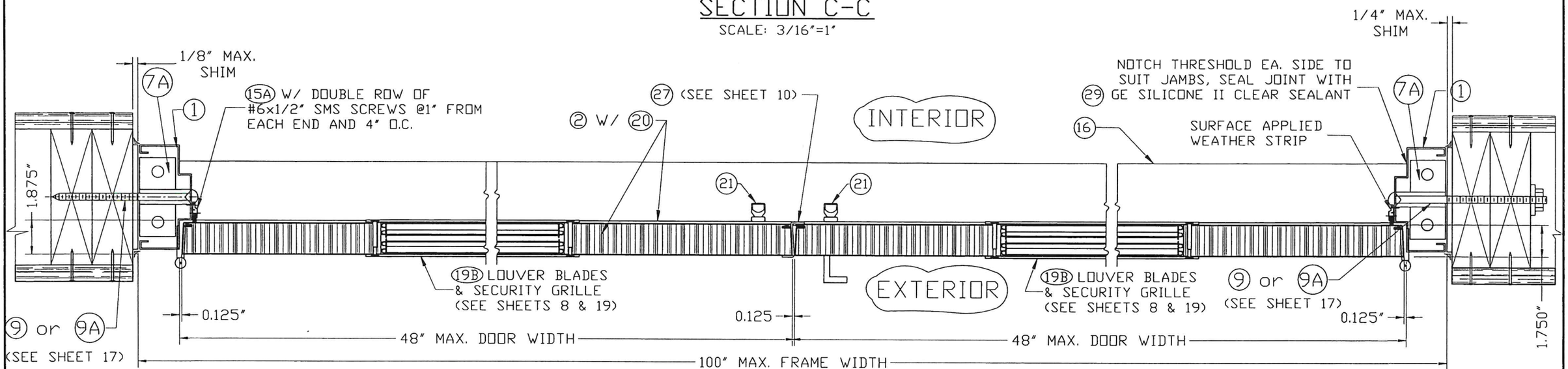

SECTION C'-C'

SCALE: 3/16"=1"

FLORIDA BUILDING CODE (HIGH VELOCITY HURRICANE ZONE)

WALTER A. TILLIT JR. LICENSE No. 44167 STATE OF FLORIDA PROFESSIONAL ENGINEER

7/2026

P.E. SEAL/SIGNATURE/DATE

©2026 TILTECO, INC.

TILTECO INC.
TILLIT TESTING & ENGINEERING COMPANY
6355 N.W. 36th. St., Ste. 305, VIRGINIA GARDENS, Fl. 33166
Phone : (305)871-1530 . Fax : (305)871-1531
e-mail: tilteco@aol.com
CA-0006719
WALTER A. TILLIT Jr. P.E.
FLORIDA Lic. # 44167

DOUBLE & SINGLE SERIES LS1B OUTSWING COMMERCIAL STEEL DOOR W/SERIES "AS" 16 GAGE STEEL FRAME LOUVERED ASSEMBLIES.

DAYBAR INDUSTRIES LTD
50 WEST DRIVE, BRAMPTON, ON CANADA, L6T 2J4
TEL: 905 625-8000
FAX: 905 625-4204

REV. No	DESCRIPTION	DATE	REV. No	DESCRIPTION	DATE
1	OLD 23-180	08/04/2026	3		
2			4		

W.H.
DRAWN BY

08/04/2026
DATE

26-242
DRAWING No

SHEET 6 OF 19

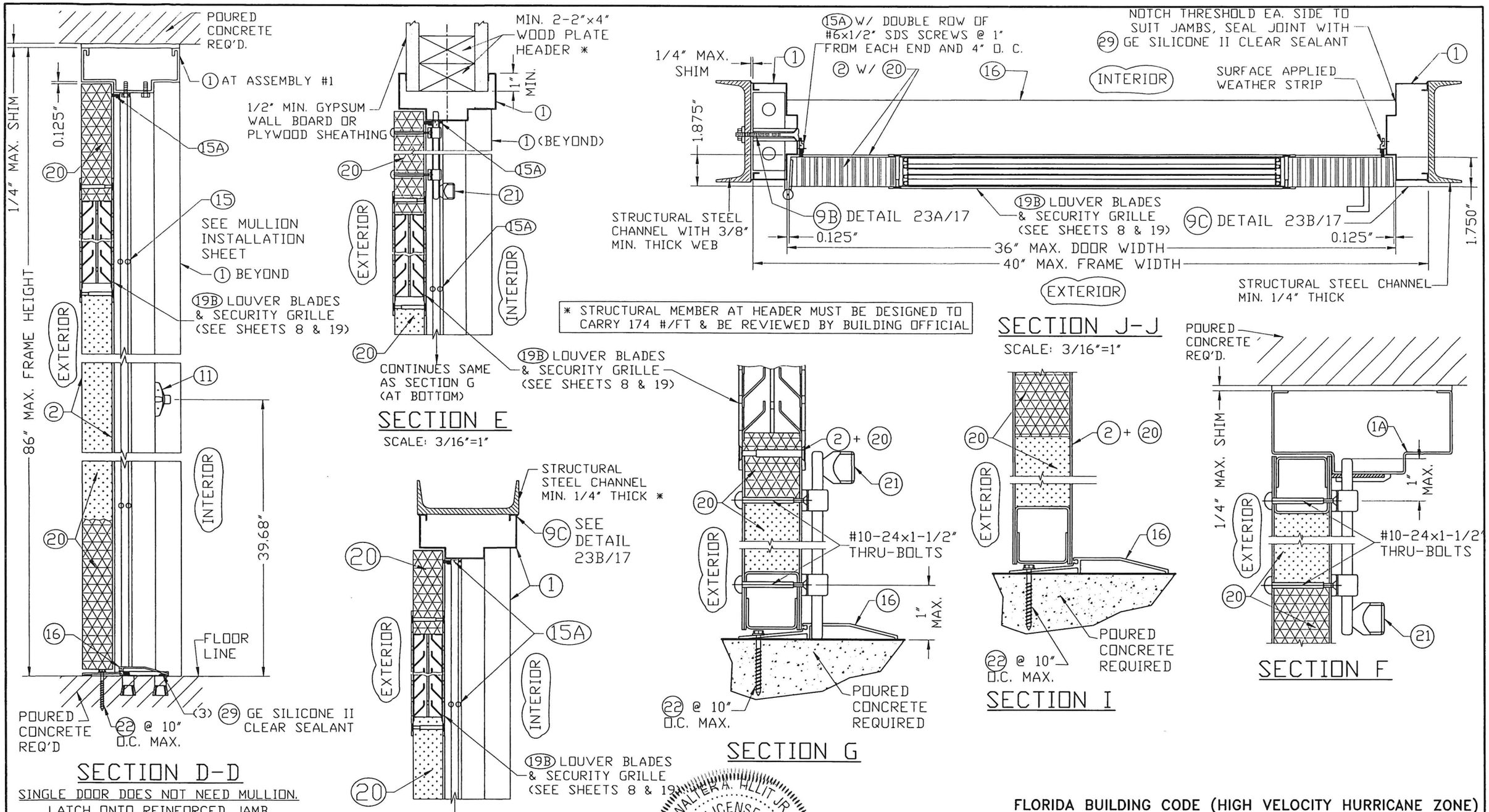

FLORIDA BUILDING CODE (HIGH VELOCITY HURRICANE ZONE)

WALTER A. TILLIT JR. LICENSE No. 44167 STATE OF FLORIDA PROFESSIONAL ENGINEER

P.E. SEAL/SIGNATURE/DATE

©2026 TILTECO, INC.

TILTECO INC.
TILLIT TESTING & ENGINEERING COMPANY
6355 N.W. 36th. St., Ste. 305, VIRGINIA GARDENS, Fl. 33166
Phone : (305)871-1530 . Fax : (305)871-1531
e-mail: tilteco@aol.com
CA-0006719
WALTER A. TILLIT Jr. P.E.
FLORIDA Lic. # 44167

DOUBLE & SINGLE SERIES LS18 OUTSWING COMMERCIAL STEEL DOOR W/SERIES "AS" 16 GAGE STEEL FRAME LOUVERED ASSEMBLIES.

DAYBAR INDUSTRIES LTD
50 WEST DRIVE, BRAMPTON, ON CANADA, L6T 2J4
TEL: 905 625-8000
FAX: 905 625-4204

REV. No	DESCRIPTION	DATE	REV. No	DESCRIPTION	DATE
1	OLD 23-180	08/04/2026	3		
2			4		

W.H.
DRAWN BY

08/04/2026
DATE

26-242
DRAWING No

SHEET 7 OF 19

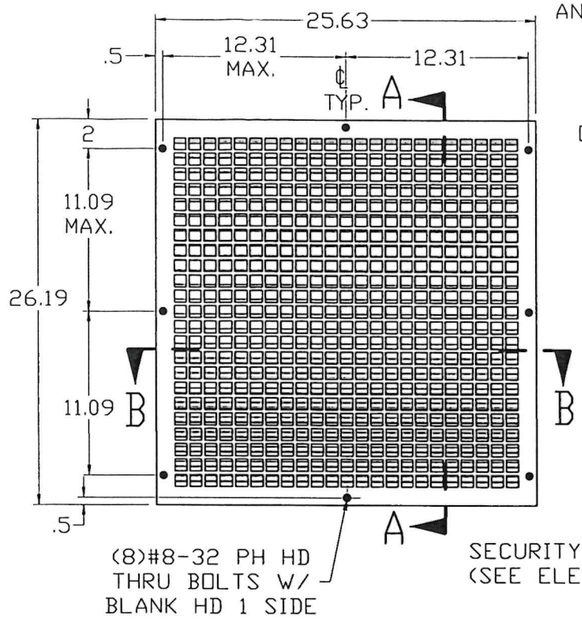

SECURITY GRILLE & LOUVER ASSEMBLY (ELEVATION)

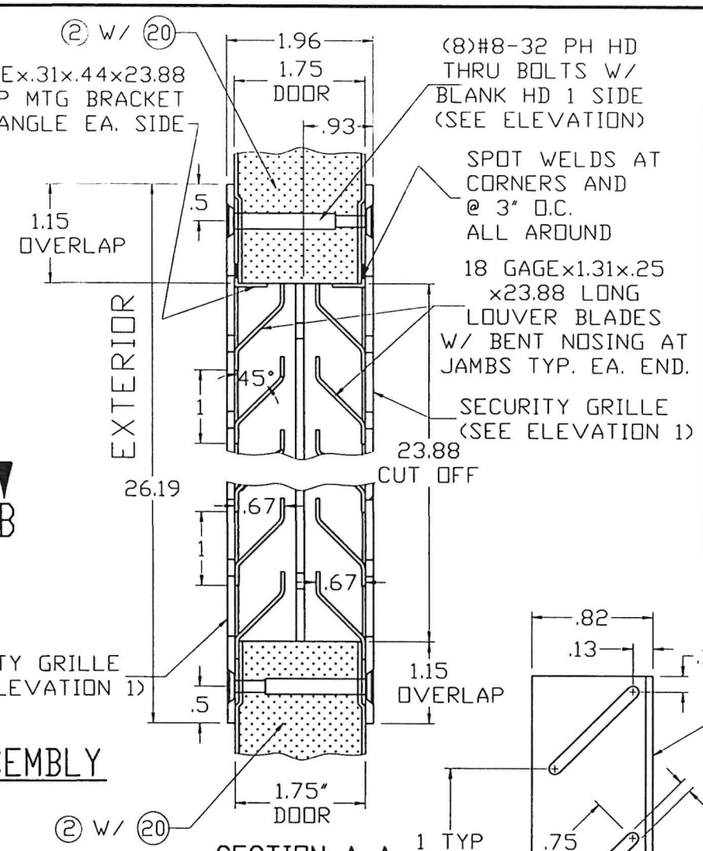

SECTION A-A

N.T.S.

AIR LOUVERS, INC. MODEL 1500-A LOUVER & SECURITY GRILLE SPECIFICATIONS

MODEL: #1500-A
MATERIAL: 18 GAUGE CRS FRAME (MIN. Fy=45 ksi) AND LOUVER BLADES; 12 GAUGE (MIN. Fy=45 ksi) CRS SECURITY GRILLE
CONSTRUCTION: MITERED AND WELDED CORNERS; SECURITY GRILLE ON INTERIOR AND EXTERIOR OF LOUVER WITH 13/16" SQUARE OPENING 1" ON CENTER.
FINISH: BAKED ON POWDER COAT.
FASTENERS: #8-32 PHILIPS HEAD THRU BOLTS WITH BLANK HEAD ONE SIDE.
FREE FLOW AREA: 40 % FREE AREA.

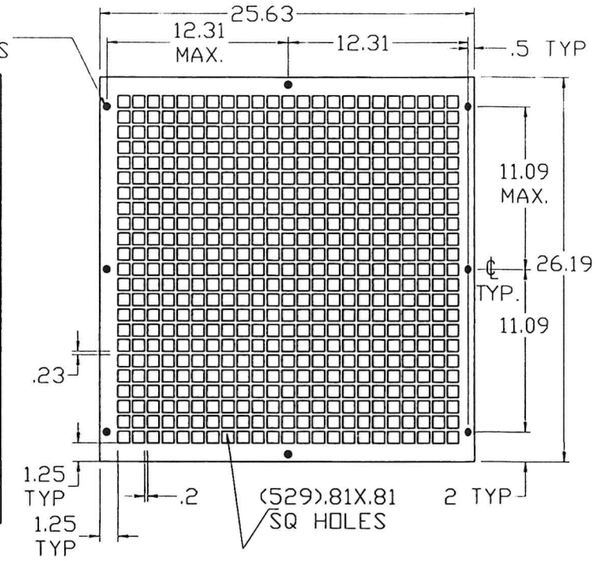

SECURITY GRILLE ELEVATION 1

.11 THICK

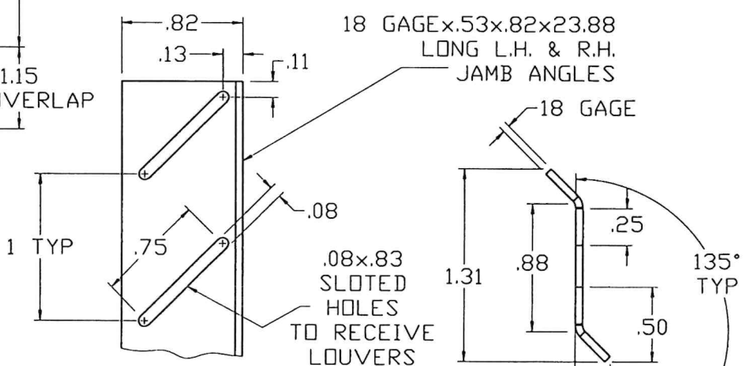

TYP. SLOTED HOLES FOR LOUVER BLADE @ JAMBS

SCALE 1 : 1

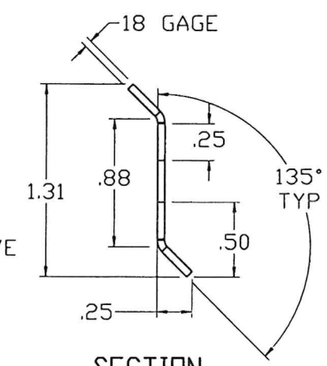

SECTION

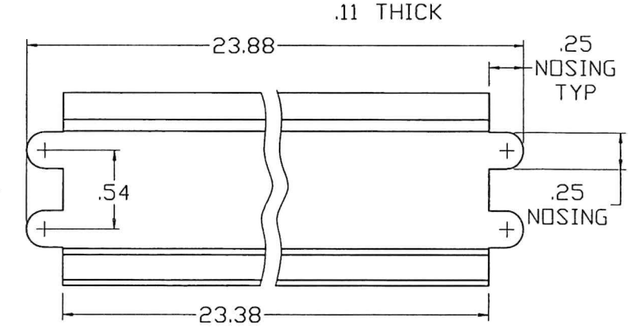

ELEVATION

TYP. LOUVER BLADE DETAIL

SCALE 1 : 1

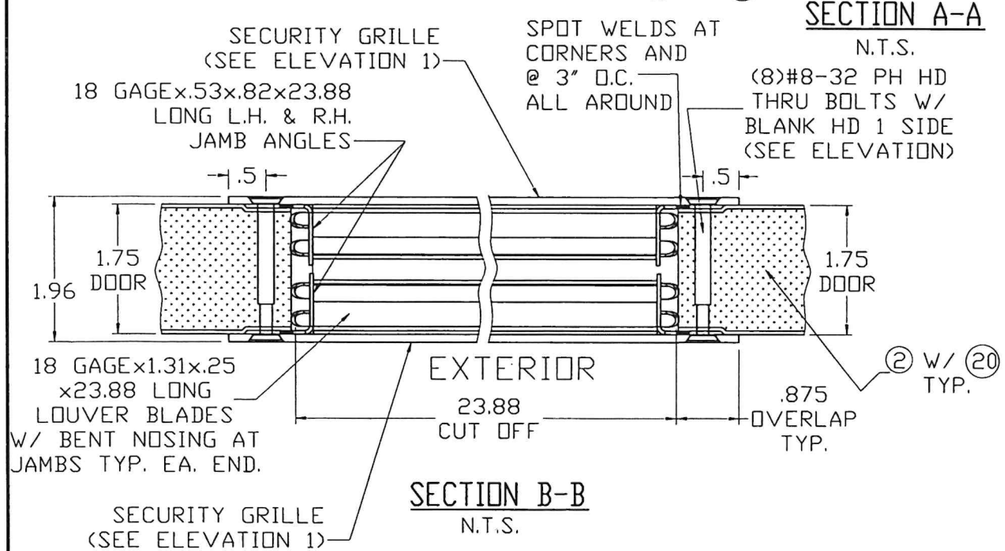

SECTION B-B

N.T.S.

(19B) MODEL 1500-A LOUVER 24"W X 24"H (MAX. 4 Ft² AREA) INVERTED "Y" BLADES C/W SECURITY GRILLE

NOTE: SEE MAX. A.S.D. DESIGN PRESSURE RATING ON SHEET 1

FLORIDA BUILDING CODE (HIGH VELOCITY HURRICANE ZONE)

WALTER A. TILLIT JR. LICENSE No. 44167 STATE OF FLORIDA PROFESSIONAL ENGINEER

8/7/2026

P.E. SEAL/SIGNATURE/DATE

©2026 TILTECO, INC.

TILTECO INC.
TILLIT TESTING & ENGINEERING COMPANY
6355 N.W. 36th. St., Ste. 305, VIRGINIA GARDENS, FL 33166
Phone : (305)871-1530 , Fax : (305)871-1531
e-mail: tilteco@aol.com
CA-0006719
WALTER A. TILLIT Jr. P.E.
FLORIDA Lic. # 44167

DOUBLE & SINGLE SERIES LS18 OUTSWING COMMERCIAL STEEL DOOR W/SERIES "AS" 16 GAGE STEEL FRAME LOUVERED ASSEMBLIES.

DAYBAR INDUSTRIES LTD
50 WEST DRIVE, BRAMPTON, ON CANADA, L6T 2J4
TEL: 905 625-8000
FAX: 905 625-4204

REV. No	DESCRIPTION	DATE	REV. No	DESCRIPTION	DATE
1	OLD 23-180	08/04/2026	3		
2			4		

W.H.
DRAWN BY

08/04/2026
DATE

26-242
DRAWING No

SHEET 8 OF 19

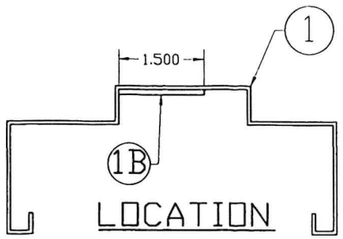

LOCATION AT FRAME

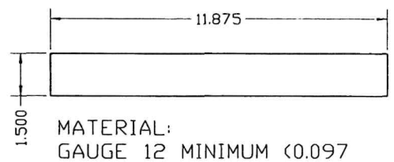

MATERIAL:
GAUGE 12 MINIMUM (0.097 THICK) GALVANNEAL, ATTACHED W/(2) LONG MIC WELDS ONE/END.

1B SURFACE STRIKE REINFORCING

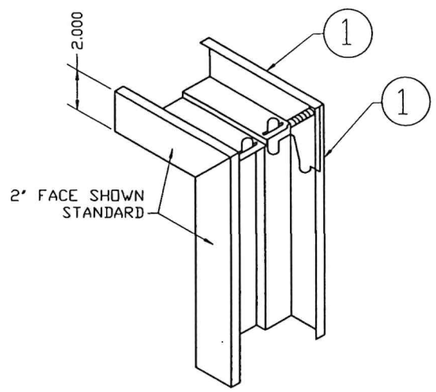

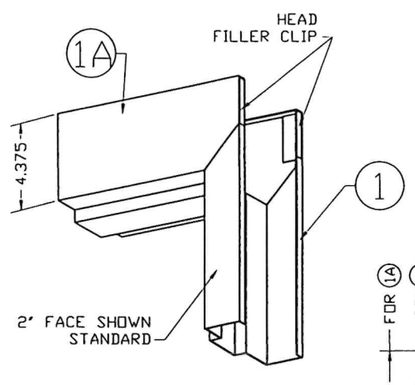

1. DIE MITERED CORNER CONT. WELDED INSIDE FACES & AT RETURNS
2. CAULK COMPLETE INSIDE CORNER WITH (29) GE SILICONE II

DETAIL 16 TYPICAL WELDED CORNER

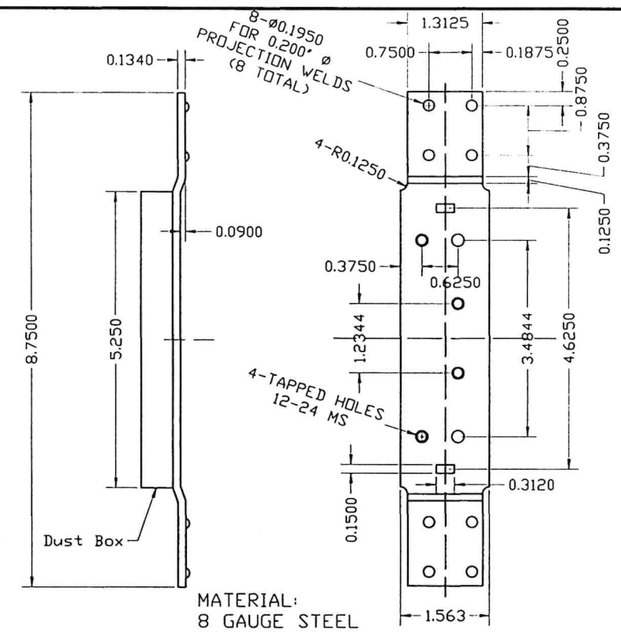

MATERIAL:
8 GAUGE STEEL GALVANNEAL

(3), (4) 4 1/2" FRAME DOOR HINGE REINFORCING DETAIL

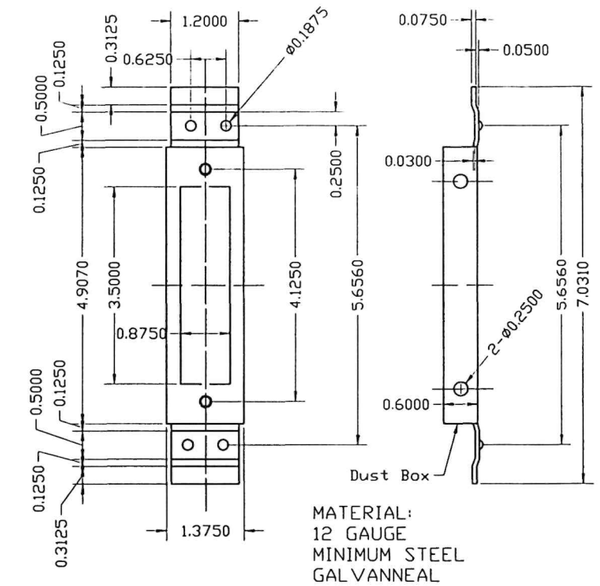

MATERIAL:
12 GAUGE MINIMUM STEEL GALVANNEAL

(5) 4 7/8" STRIKE REINFORCEMENT FOR FRAME DETAIL

ATTACHED W/(4) 3/16" Ø PROJECTION WELDS.

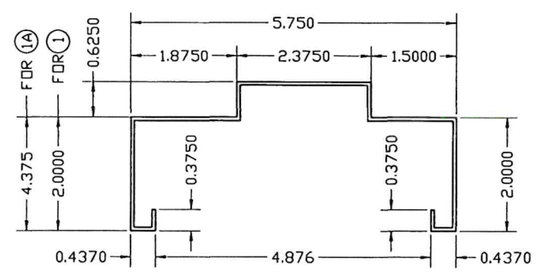

MATERIAL:
GAUGE 16 MINIMUM (.057) GALVANNEAL

(1) TYPICAL JAMB & HEAD SECTION

(1A) OPTIONAL HEAD SECTION

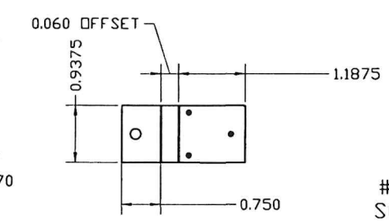

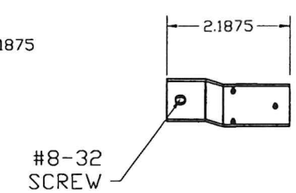

DEAD LOCK STRIKE TAB 14 GA (0.074) MIN

ATTACHED TO STRIKE JAMB W/ (3) 1/8" Ø PROJECTION WELDS.

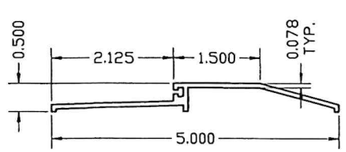

(16) EXTRUDED ALUMINUM THRESHOLD NGP #950NA

FRAME SECTIONS AND REINFORCING DETAILS

FLORIDA BUILDING CODE (HIGH VELOCITY HURRICANE ZONE)

WALTER A. TILLIT JR. LICENSE No. 44167 STATE OF FLORIDA PROFESSIONAL ENGINEER

P.E. SEAL/SIGNATURE/DATE

©2026 TILTECO, INC.

TILTECO INC.
TILLIT TESTING & ENGINEERING COMPANY
6355 N.W. 36th. St., Ste. 305, VIRGINIA GARDENS, Fl. 33166
Phone : (305)871-1530 . Fax : (305)871-1531
e-mail: tilteco@aol.com
CA-0006719
WALTER A. TILLIT Jr. P.E.
FLORIDA Lic. # 44167

DOUBLE & SINGLE SERIES LS18 OUTSWING COMMERCIAL STEEL DOOR W/SERIES "AS" 16 GAGE STEEL FRAME LOUVERED ASSEMBLIES.

DAYBAR INDUSTRIES LTD
50 WEST DRIVE, BRAMPTON, ON CANADA, L6T 2J4
TEL: 905 625-8000
FAX: 905 625-4204

REV. No	DESCRIPTION	DATE	REV. No	DESCRIPTION	DATE
1	OLD 23-180	08/04/2026	3		
2			4		

W.H.
DRAWN BY

08/04/2026
DATE

26-242
DRAWING No

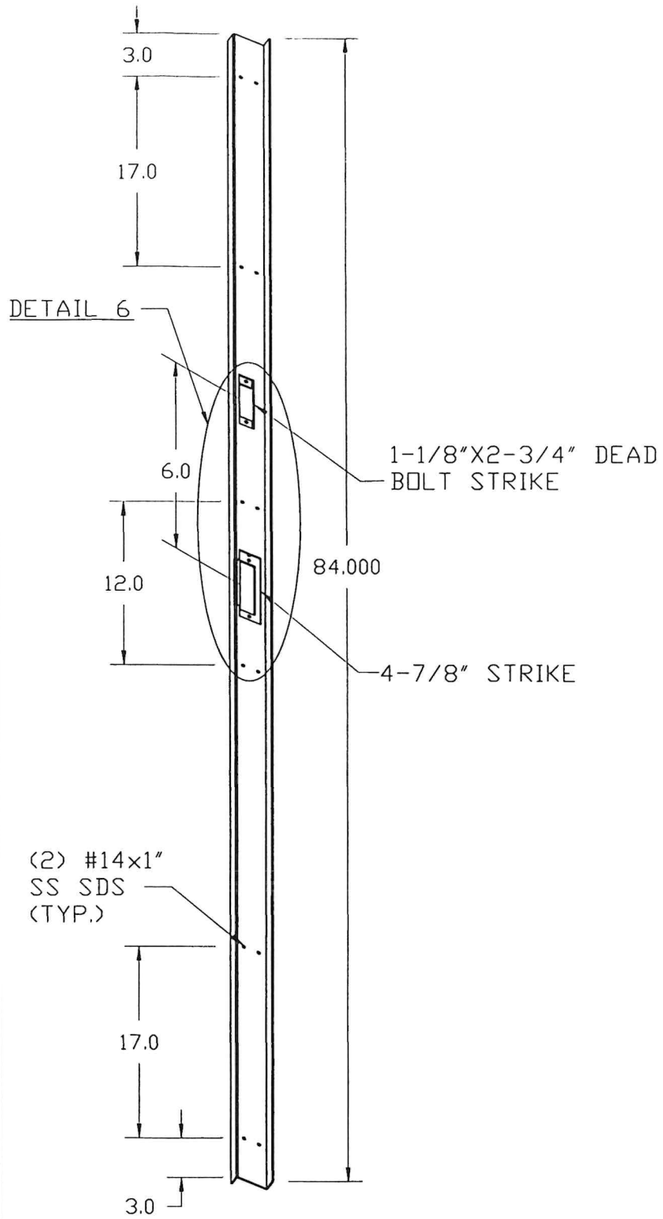

(27) "Z" ASTRAGAL ISOMETRIC DETAIL

MATERIAL:
0.075" THICK STEEL

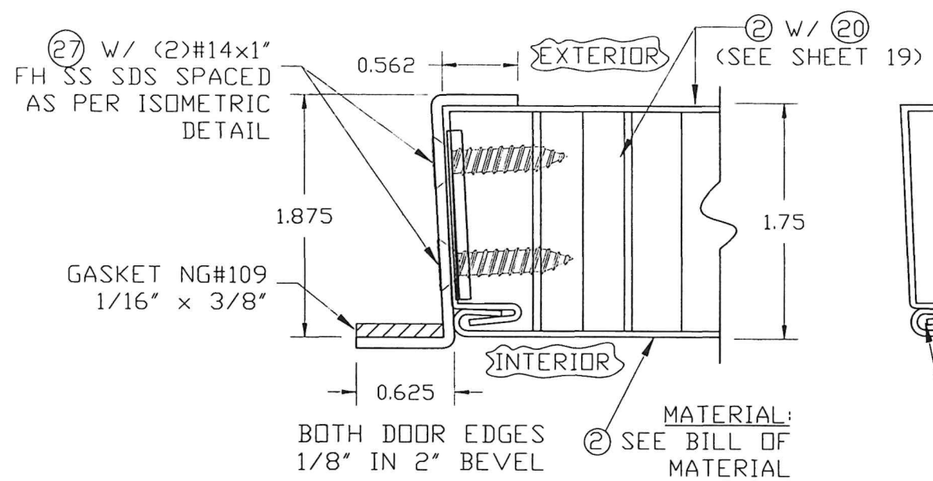

SECTION THRU ASTRAGAL AT DOUBLE DOOR

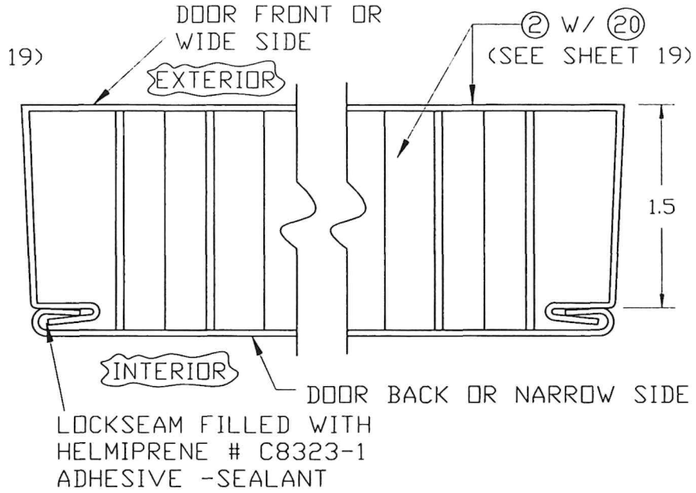

TYPICAL CROSS SECTION THRU DOOR

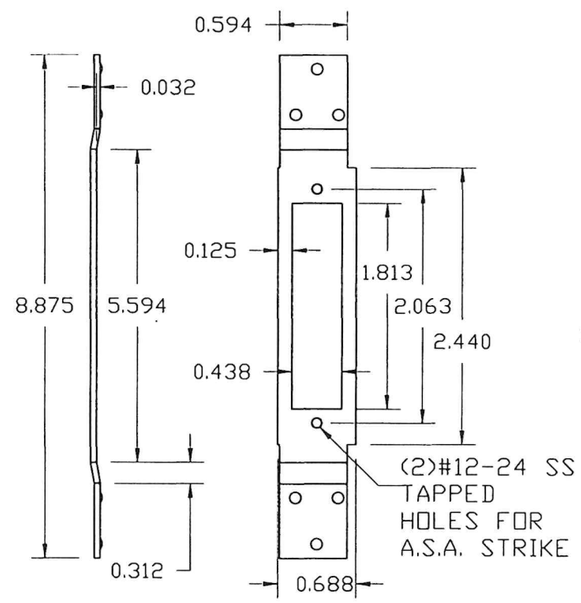

12 GAGE STEEL ASA 1299 STRIKE REINFORCEMENT FOR ASTRAGAL

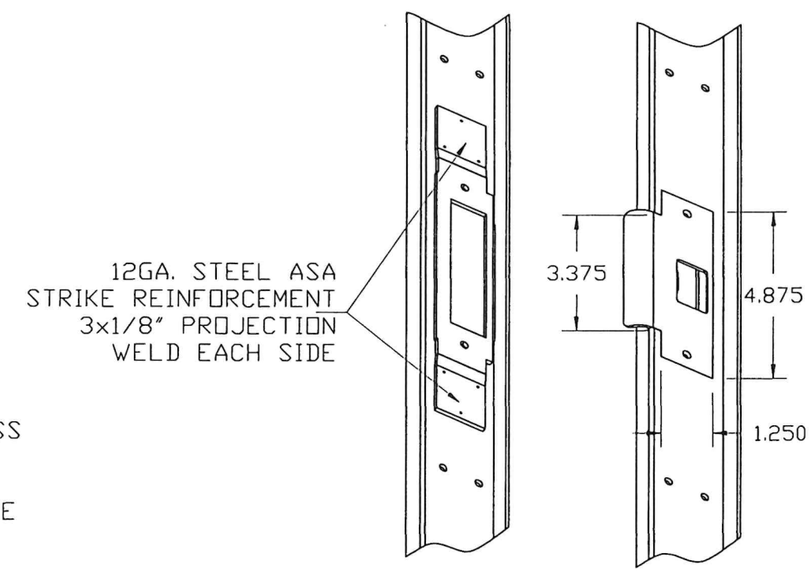

DETAIL 6

FLORIDA BUILDING CODE (HIGH VELOCITY HURRICANE ZONE)

WALTER A. TILLIT LICENSE No. 44167 STATE OF FLORIDA PROFESSIONAL ENGINEER

P.E. SEAL/SIGNATURE/DATE

©2026 TILTECO, INC.

TILTECO INC.
TILLIT TESTING & ENGINEERING COMPANY
6355 N.W. 36th. St., Ste. 305, VIRGINIA GARDENS, Fl. 33166
Phone : (305)871-1530 . Fax : (305)871-1531
e-mail: tilteco@aol.com
CA-0006719
WALTER A. TILLIT Jr. P.E.
FLORIDA Lic. # 44167

DOUBLE & SINGLE SERIES LS18 OUTSWING COMMERCIAL STEEL DOOR W/SERIES "AS" 16 GAGE STEEL FRAME LOUVERED ASSEMBLIES.

DAYBAR INDUSTRIES LTD
50 WEST DRIVE, BRAMPTON, ON CANADA, L6T 2J4
TEL: 905 625-8000
FAX: 905 625-4204

REV. No	DESCRIPTION	DATE	REV. No	DESCRIPTION	DATE
1	OLD 23-180	08/04/2026	3		
2			4		

W.H.
DRAWN BY

08/04/2026
DATE

26-242
DRAWING No

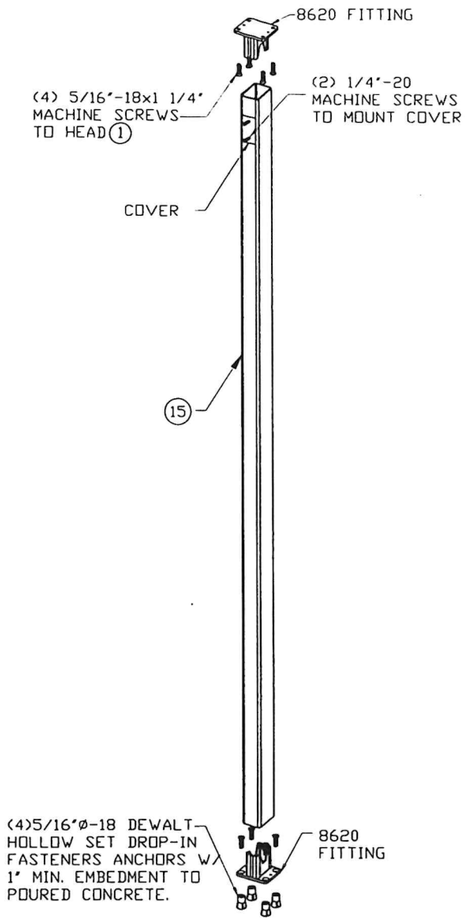

ISOMETRIC

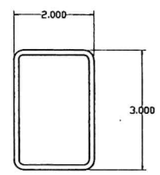

(15) MULLION BODY
0.125 THK. WALL
A 500 GRADE B STEEL

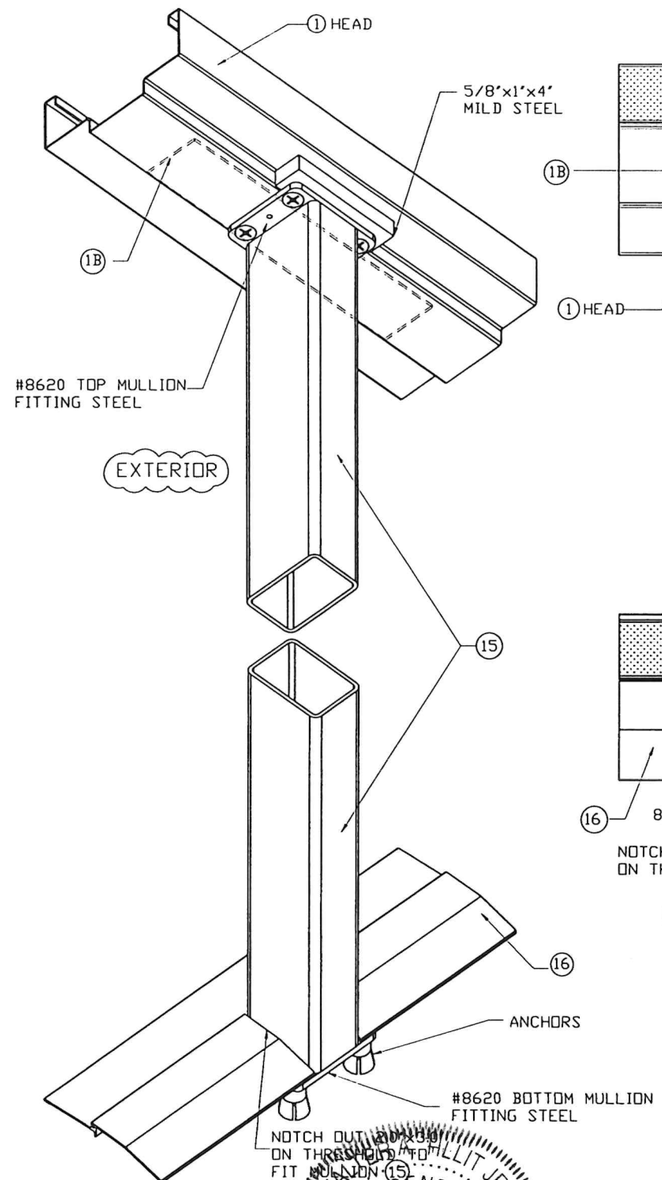

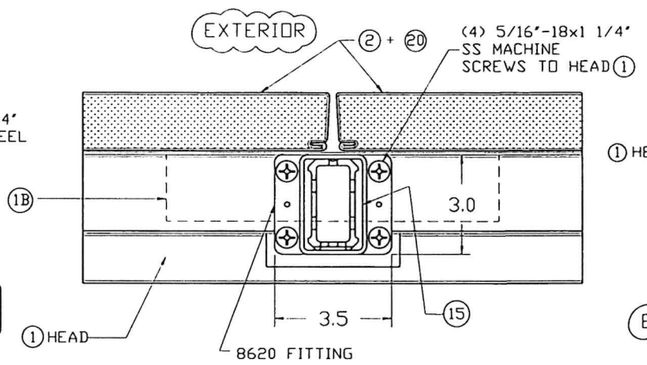

CONNECTION AT TOP (PLAN)

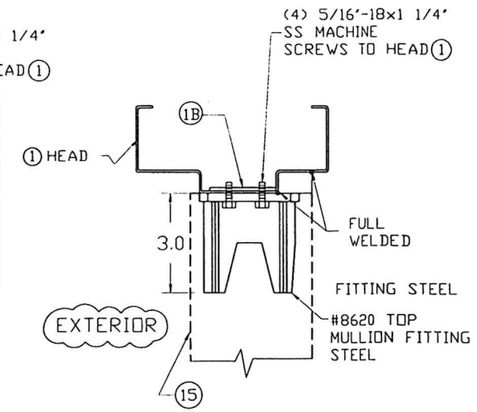

SECTION

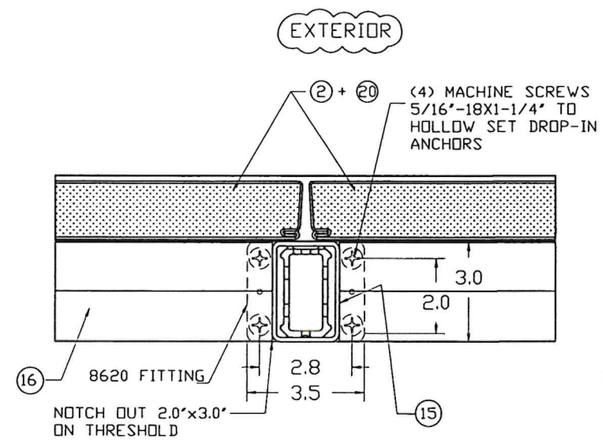

CONNECTION AT BOTTOM (PLAN)

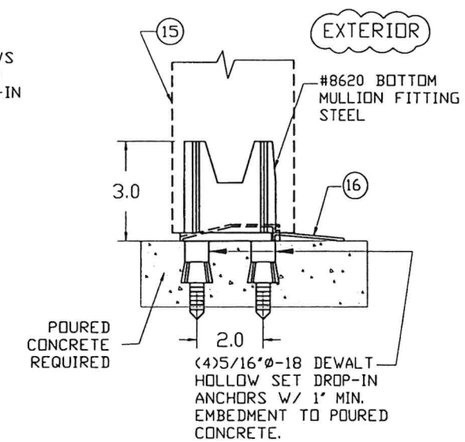

SECTION

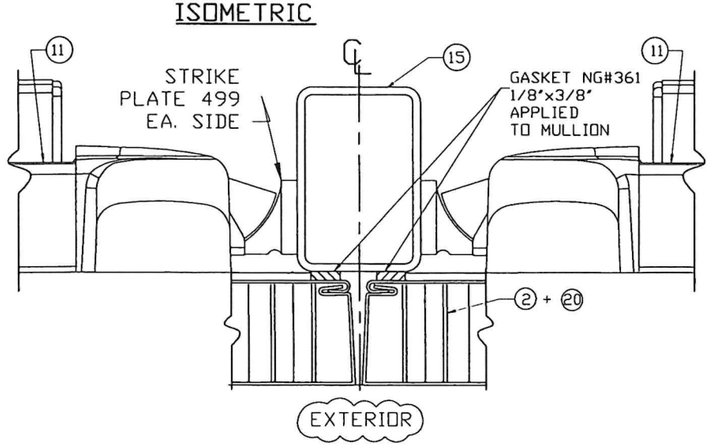

MULLION/DOOR SEAL

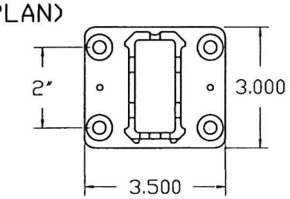

MULLION FITTING
8620 STEEL

FLORIDA BUILDING CODE (HIGH VELOCITY HURRICANE ZONE)

(15) VON DUPRIN SERIES 9954 (W/ 499 STRIKE PLATE) MULLION INSTALLATION

WALTER A. TILLIT JR. LICENSE No. 44167 STATE OF FLORIDA PROFESSIONAL ENGINEER

P.E. SEAL/SIGNATURE/DATE

©2026 TILTECO, INC.

TILTECO INC.
TILLIT TESTING & ENGINEERING COMPANY
6355 N.W. 36th. St., Ste. 305, VIRGINIA GARDENS, Fl. 33166
Phone : (305)871-1530 . Fax : (305)871-1531
e-mail: tilteco@aol.com
CA-0006719
WALTER A. TILLIT Jr. P.E.
FLORIDA Lic. # 44167

DOUBLE & SINGLE SERIES LS18 OUTSWING COMMERCIAL STEEL DOOR W/SERIES "AS" 16 GAGE STEEL FRAME LOUVERED ASSEMBLIES.

DAYBAR INDUSTRIES LTD
50 WEST DRIVE, BRAMPTON, ON CANADA, L6T 2J4
TEL: 905 625-8000
FAX: 905 625-4204

REV. No	DESCRIPTION	DATE	REV. No	DESCRIPTION	DATE
1	OLD 23-180	08/04/2026	3		
2			4		

W.H.
DRAWN BY

08/04/2026
DATE

26-242
DRAWING No

SHEET 11 OF 19

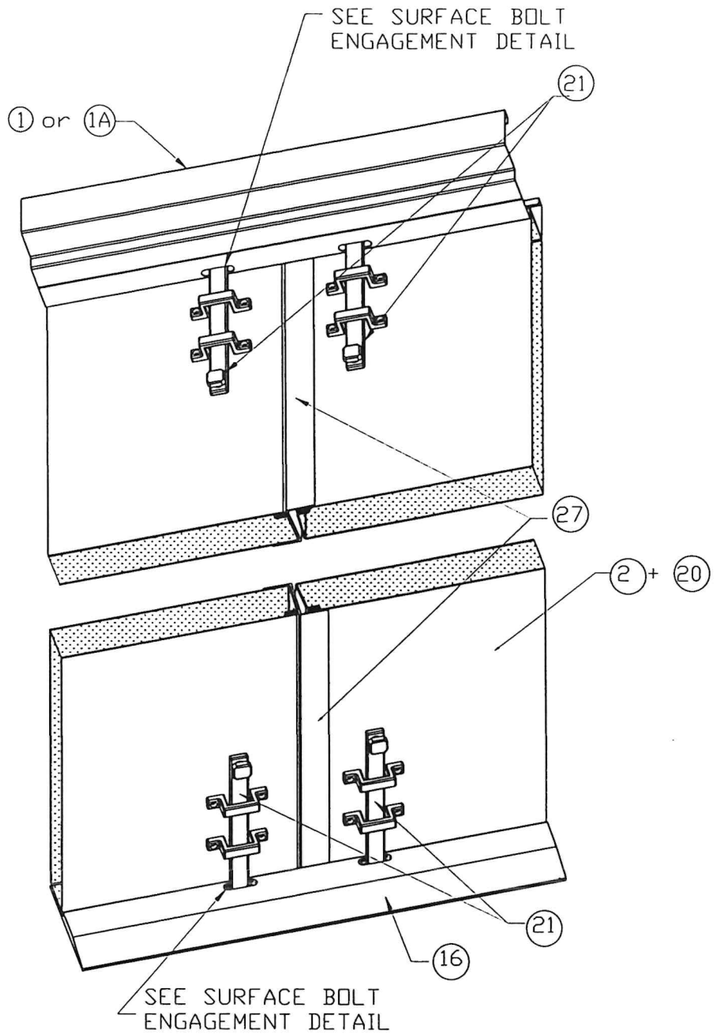

SURFACE BOLT INSTALLATION AT DOOR W/ ASTRAGAL (INTERIOR VIEW)

NOTE:
SURFACE BOLT
MANUFACTURER-HAGER
MODEL #275D
MATERIAL-STEEL
FINISH US26D

21 8" #275D HAGER SURFACE BOLT

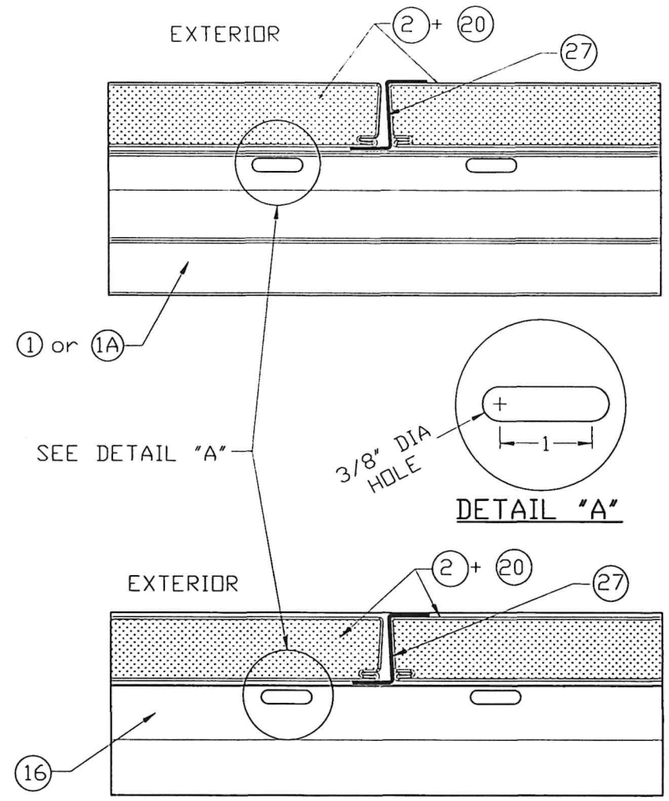

TYPICAL SURFACE BOLT ENGAGEMENT DETAIL AT HEAD & SILL

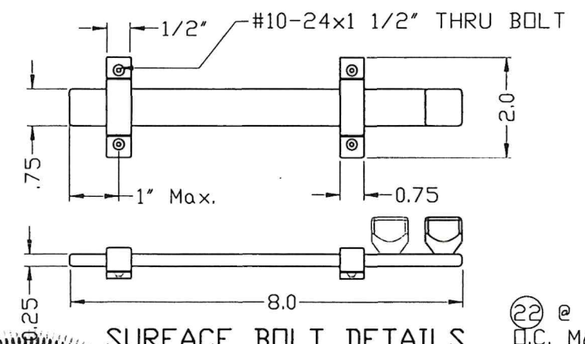

SURFACE BOLT DETAILS

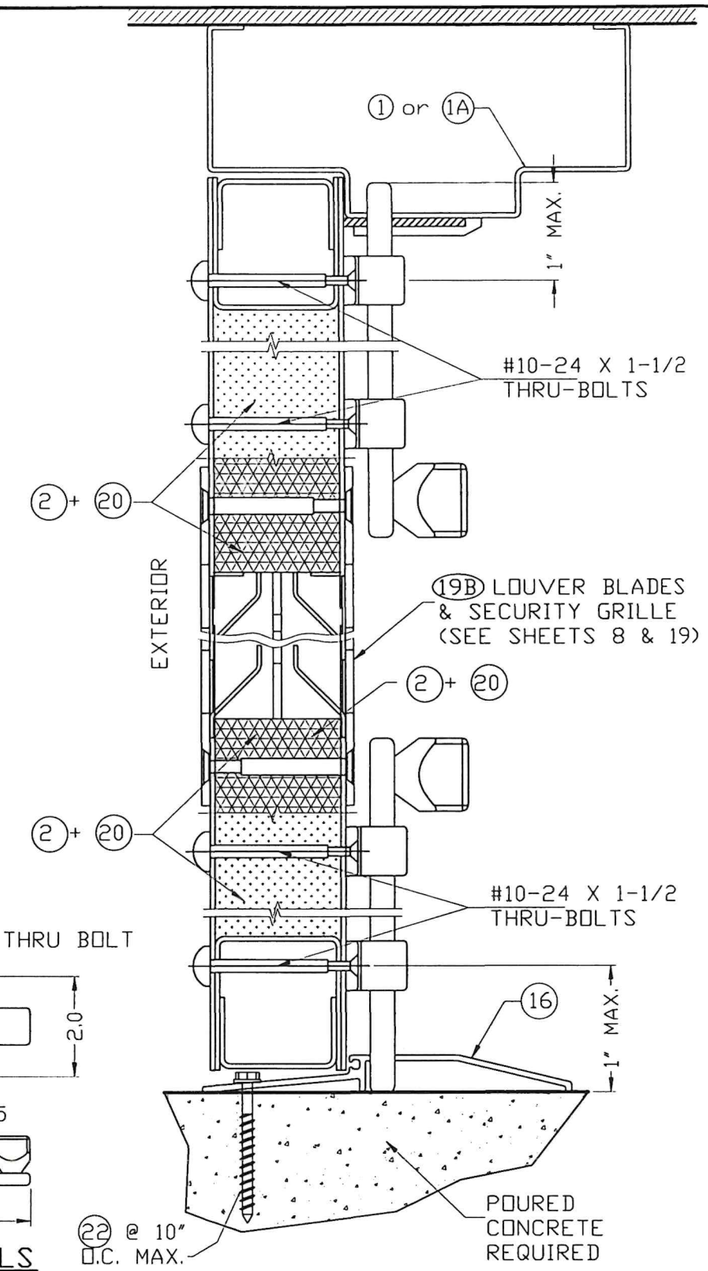

FLORIDA BUILDING CODE (HIGH VELOCITY HURRICANE ZONE)

WALTER A. TILLIT JR. LICENSE No. 44167 STATE OF FLORIDA PROFESSIONAL ENGINEER

2/2026

P.E. SEAL/SIGNATURE/DATE

©2026 TILTECO, INC.

TILTECO INC.
TILLIT TESTING & ENGINEERING COMPANY
6355 N.W. 36th. St., Ste. 305, VIRGINIA GARDENS, Fl. 33166
Phone : (305)871-1530 . Fax : (305)871-1531
e-mail: tilteco@aol.com
CA-0006719
WALTER A. TILLIT Jr. P.E.
FLORIDA Lic. # 44167

DOUBLE & SINGLE SERIES LS18 OUTSWING COMMERCIAL STEEL DOOR W/SERIES "AS" 16 GAGE STEEL FRAME LOUVERED ASSEMBLIES.

DAYBAR INDUSTRIES LTD
50 WEST DRIVE, BRAMPTON, ON CANADA, L6T 2J4
TEL: 905 625-8000
FAX: 905 625-4204

REV. No	DESCRIPTION	DATE	REV. No	DESCRIPTION	DATE
1	OLD 23-180	08/04/2026	3		
2			4		

W.H.
DRAWN BY

08/04/2026
DATE

26-242
DRAWING No

SHEET 12 OF 19

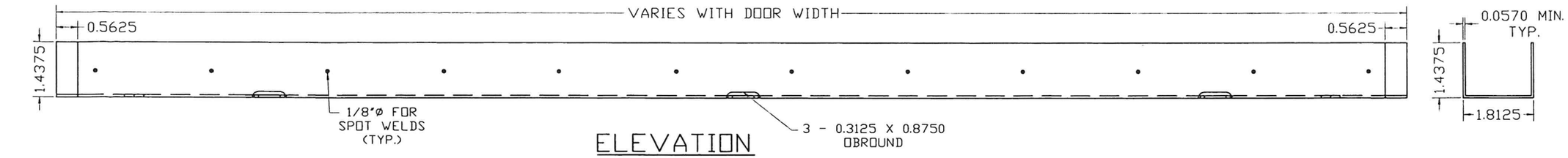

ELEVATION

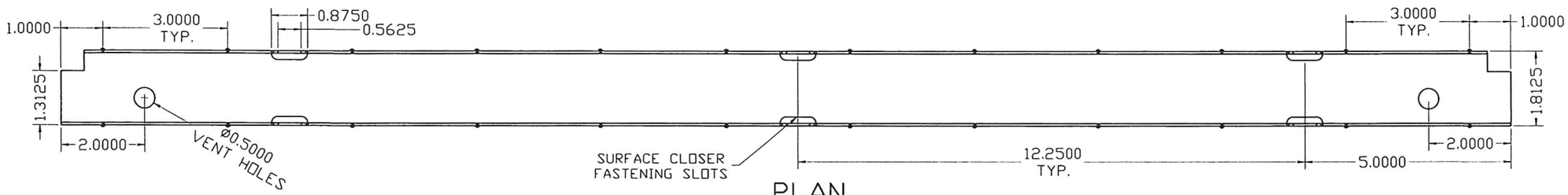

PLAN

(26) DOOR TOP AND BOTTOM TYPICAL END CHANNEL DETAIL

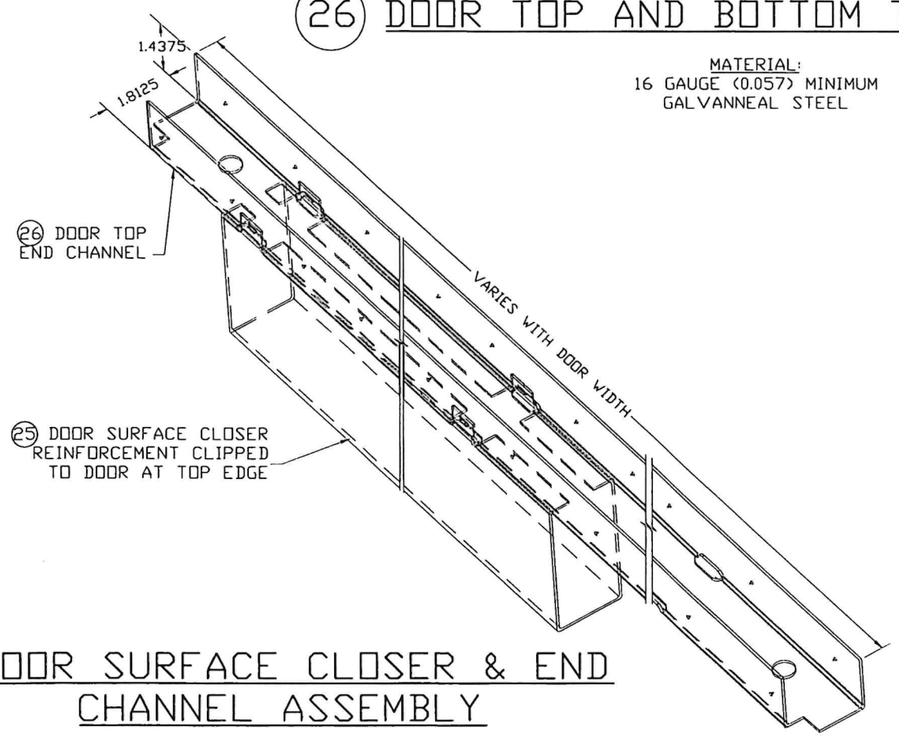

MATERIAL:
16 GAUGE (0.057) MINIMUM
GALVANNEAL STEEL

DOOR SURFACE CLOSER & END CHANNEL ASSEMBLY

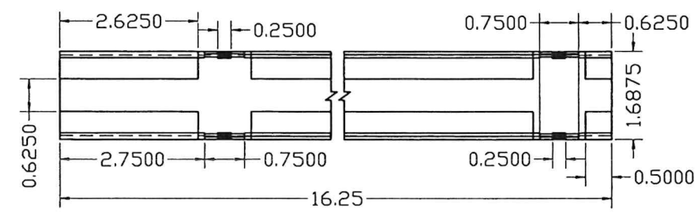

PLAN

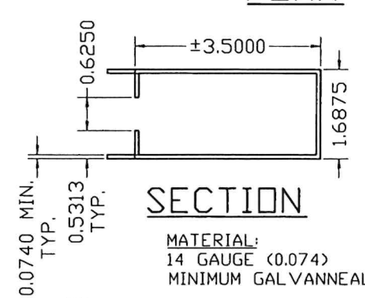

SECTION

MATERIAL:
14 GAUGE (0.074)
MINIMUM GALVANNEAL

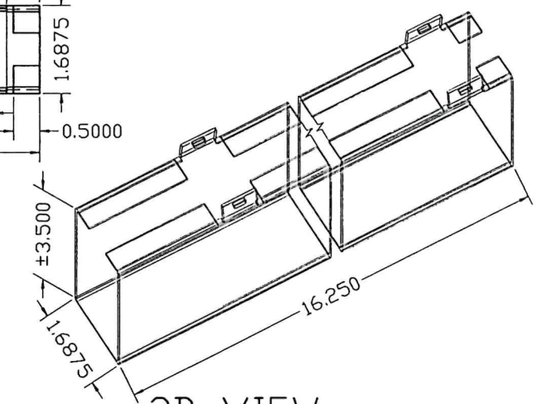

3D VIEW

LAMINATED TO EACH FACE OF DOOR
W/ CONTACT ADHESIVE (HELHIBOND 8326-1)
AT HINGE EDGE AND TOP END CHANNEL.

(25) DOOR SURFACE CLOSER REINFORCEMENT DETAIL

FLORIDA BUILDING CODE (HIGH VELOCITY HURRICANE ZONE)

WALTER A. TILLIT JR. LICENSE No. 44167 STATE OF FLORIDA PROFESSIONAL ENGINEER

7/2026

P.E. SEAL/SIGNATURE/DATE

©2026 TILTECO, INC.

TILTECO INC.
TILLIT TESTING & ENGINEERING COMPANY
6355 N.W. 36th. St., Ste. 305, VIRGINIA GARDENS, Fl. 33166
Phone : (305)871-1530 . Fax : (305)871-1531
e-mail: tilteco@aol.com
CA-0006719
WALTER A. TILLIT Jr. P.E.
FLORIDA Lic. # 44167

DOUBLE & SINGLE SERIES LS18 OUTSWING COMMERCIAL STEEL DOOR W/SERIES "AS" 16 GAGE STEEL FRAME LOUVERED ASSEMBLIES.

DAYBAR INDUSTRIES LTD
50 WEST DRIVE, BRAMPTON,
ON CANADA, L6T 2J4
TEL: 905 625-8000
FAX: 905 625-4204

REV. No	DESCRIPTION	DATE	REV. No	DESCRIPTION	DATE
1	OLD 23-180	08/04/2026	3		
2			4		

W.H.
DRAWN BY

08/04/2026
DATE

26-242
DRAWING No

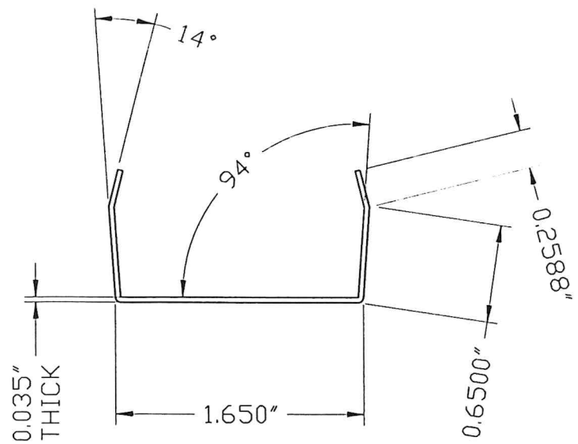

DETAIL A
SNAP IN CHANNEL

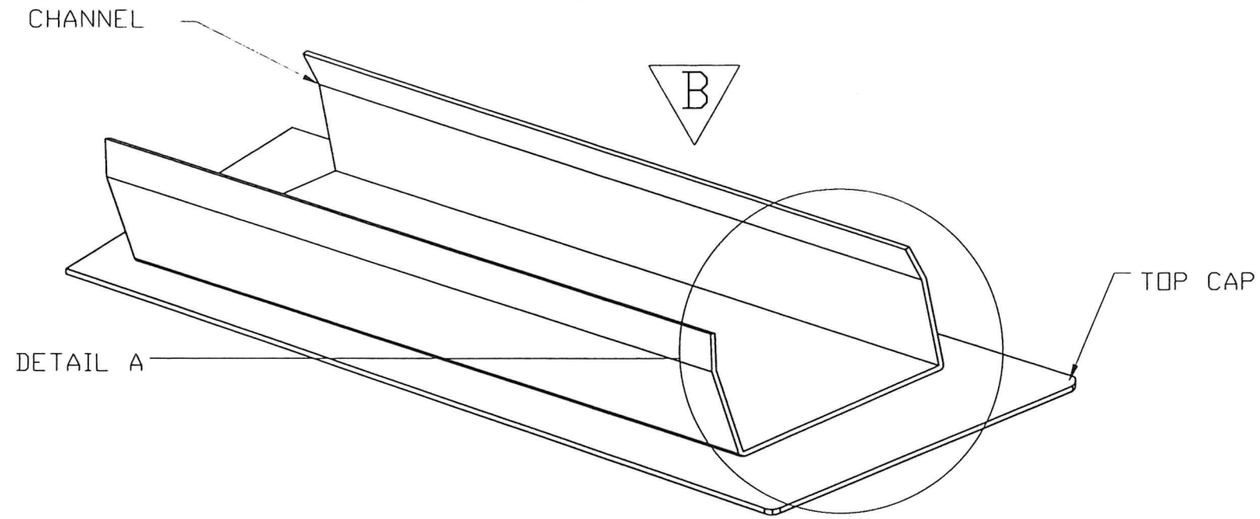

ASSEMBLY (ISOMETRIC)
(SNAP IN CHANNEL WITH TOP CAP)

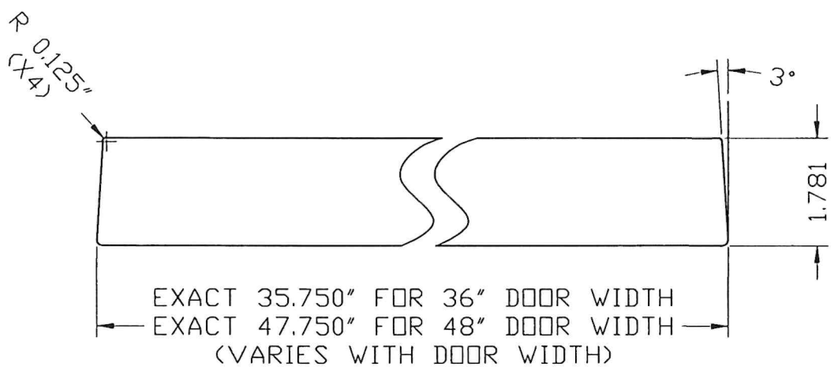

STANDARD TOP CAP

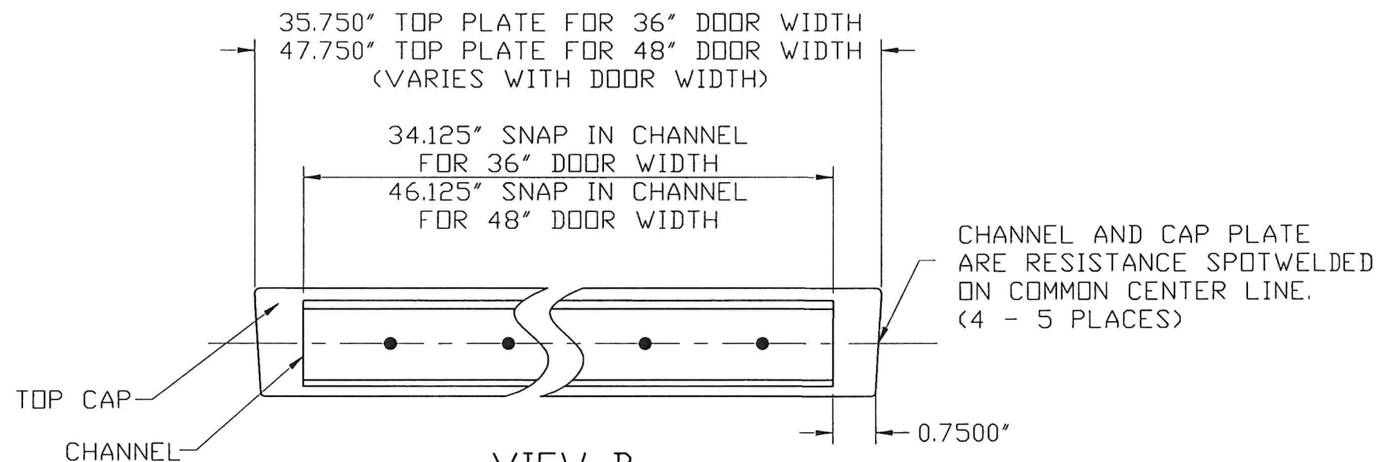

VIEW B

28 DOOR SNAP IN TOP CAP DETAIL

MATERIAL: 20 GA GALVANNEAL STEEL FOR BOTH PCS. ASTM A-653, A-60

INSTALLATION OPTIONS:

(A) CAULK AND PRESSFIT

(B) CAULK, PRESSFIT AND TACK WELD

WALTER A. TILLIT JR
LICENSE
No. 44167
STATE OF FLORIDA
PROFESSIONAL ENGINEER

SIGNATURE, SEAL/SIGNATURE/DATE

FLORIDA BUILDING CODE (HIGH VELOCITY HURRICANE ZONE)

©2026 TILTECO, INC.

TILTECO INC.
TILLIT TESTING & ENGINEERING COMPANY
6355 N.W. 36th. St., Ste. 305, VIRGINIA GARDENS, Fl. 33166
Phone : (305)871-1530 . Fax : (305)871-1531
e-mail: tilteco@aol.com
CA-0006719
WALTER A. TILLIT Jr. P.E.
FLORIDA Lic. # 44167

DOUBLE & SINGLE SERIES LS18 OUTSWING COMMERCIAL STEEL DOOR W/SERIES "AS" 16 GAGE STEEL FRAME LOUVERED ASSEMBLIES.

DAYBAR INDUSTRIES LTD
50 WEST DRIVE, BRAMPTON, ON CANADA, L6T 2J4
TEL: 905 625-8000
FAX: 905 625-4204

REV. No	DESCRIPTION	DATE	REV. No	DESCRIPTION	DATE
1	OLD 23-180	08/04/2026	3		
2			4		

W.H.
DRAWN BY

08/04/2026
DATE

26-242
DRAWING No

SHEET 14 OF 19

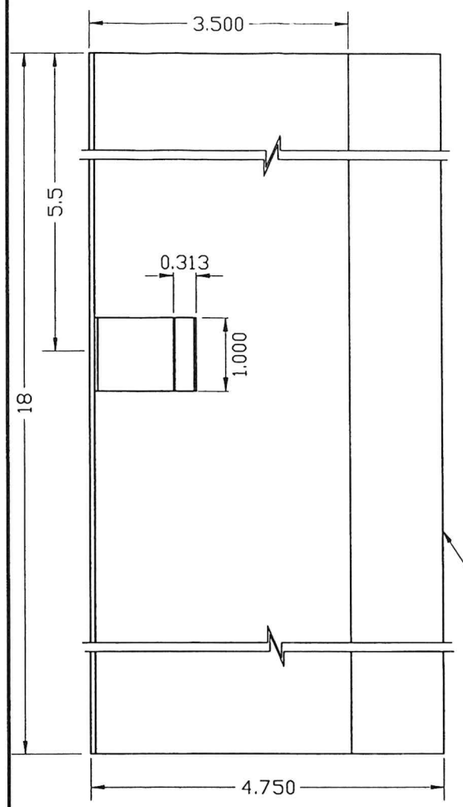

GAGE 14 (0.074) MINIMUM RP REINFORCING SAME AS #86. LESS LOCK CLIP & MOUNTING TABS, GLUE W /CONTACT ADHESIVE TO DOOR FACE

ELEVATION

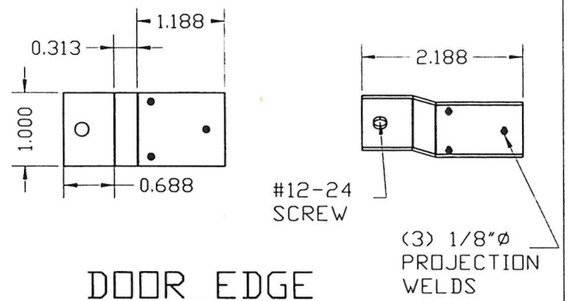

DOOR EDGE MOUNTING TAB

14 GA (0.074) MIN
STEEL

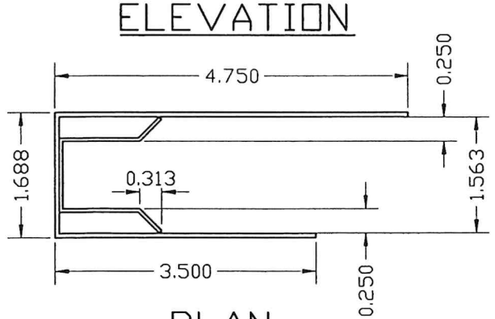

PLAN

MATERIAL:
ALL GALVANNEAL STEEL

LOCK CLIP-18GA (0.045) MIN. ONLY VALID FOR ASSEMBLY WHERE APPLICABLE

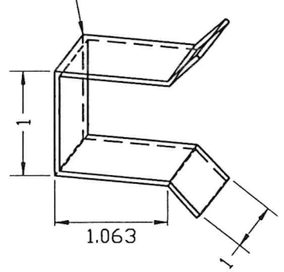

(23) ANSI #A115.1 #86 MORTISE LOCK (12) /RIM PANIC (11) REINFORCING

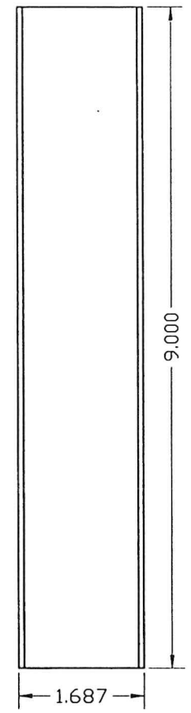

VIEW X

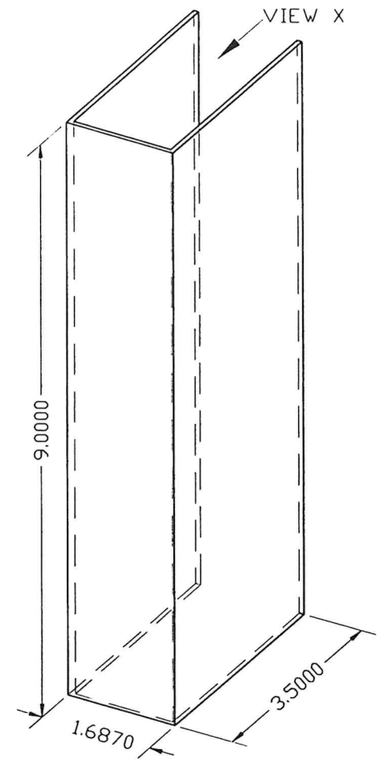

3D VIEW

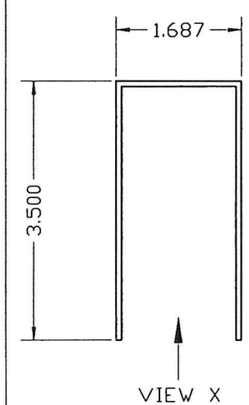

PLAN

MATERIAL:
14 GAUGE (0.074) MINIMUM GALVANNEAL STEEL, GLUED TO DOOR AT HEAD & SILL USING HEMILBOND 8320-1 CONTACT ADHESIVE.

(18) DOOR SURFACE BOLT REINFORCING DETAIL

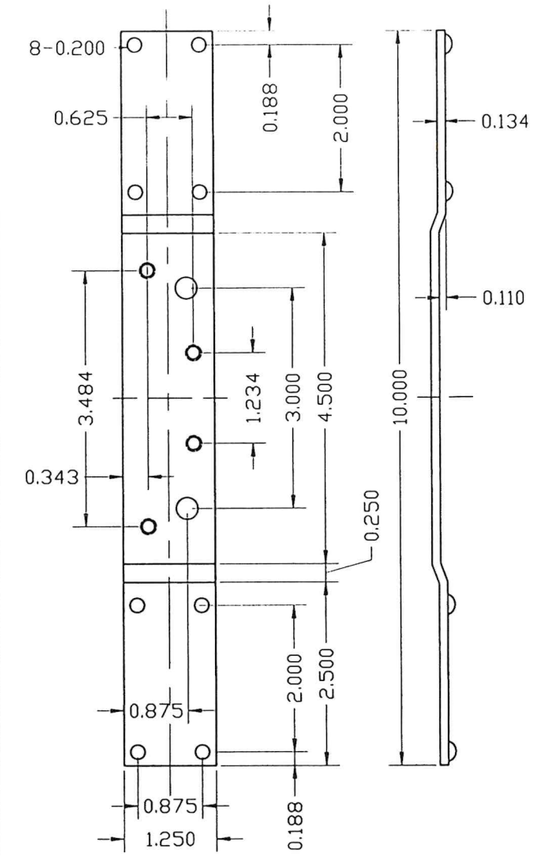

(17) 4 1/2" HINGE BAR REINFORCING FOR DOOR

MATERIAL:
8 GAUGE
GALVANNEAL STEEL

FLORIDA BUILDING CODE (HIGH VELOCITY HURRICANE ZONE)

WALTER A. TILLIT JR. LICENSE No. 44167 STATE OF FLORIDA PROFESSIONAL ENGINEER

8/12/2026

P.E. SEAL/SIGNATURE/DATE

©2026 TILTECO, INC.

TILTECO INC.
TILLIT TESTING & ENGINEERING COMPANY
6355 N.W. 36th. St., Ste. 305, VIRGINIA GARDENS, Fl. 33166
Phone : (305)871-1530 . Fax : (305)871-1531
e-mail: tilteco@aol.com
CA-0006719
WALTER A. TILLIT Jr. P.E.
FLORIDA Lic. # 44167

DOUBLE & SINGLE SERIES LS18 OUTSWING COMMERCIAL STEEL DOOR W/SERIES "AS" 16 GAGE STEEL FRAME LOUVERED ASSEMBLIES.

DAYBAR INDUSTRIES LTD
50 WEST DRIVE, BRAMPTON,
ON CANADA, L6T 2J4
TEL: 905 625-8000
FAX: 905 625-4204

REV. No	DESCRIPTION	DATE	REV. No	DESCRIPTION	DATE
1	OLD 23-180	08/04/2026	3		
2			4		

W.H.
DRAWN BY

08/04/2026
DATE

26-242
DRAWING No

SHEET 15 OF 19

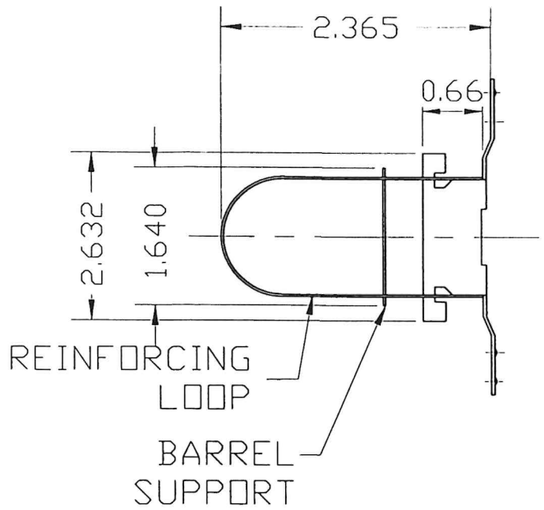

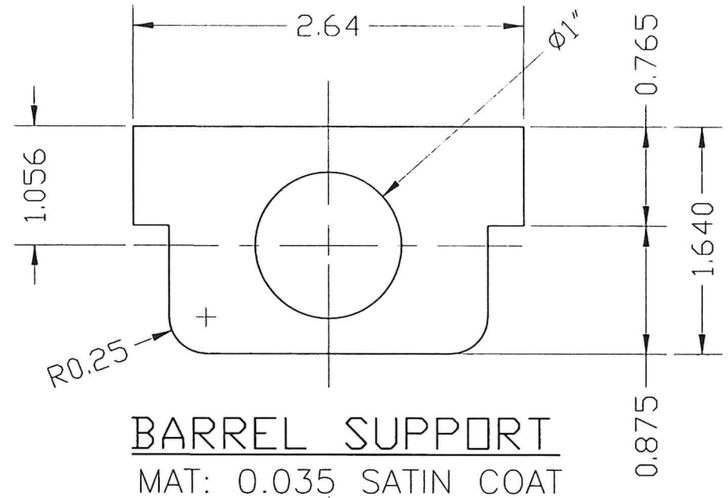

BARREL SUPPORT
MAT: 0.035 SATIN COAT

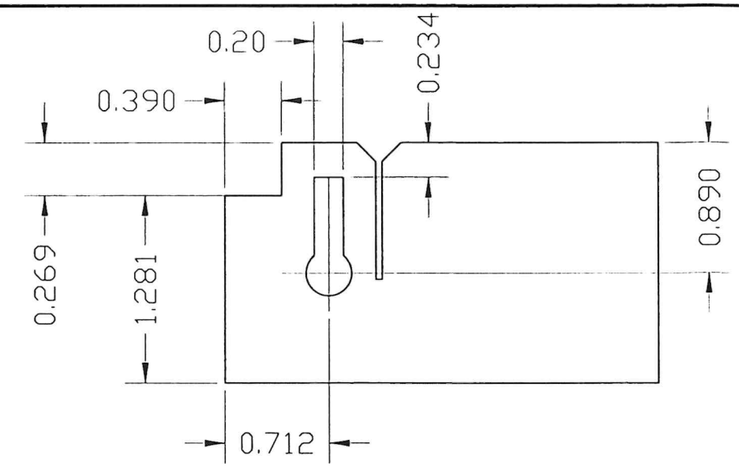

REINFORCING LOOP
MAT: 0.035 SATIN COAT

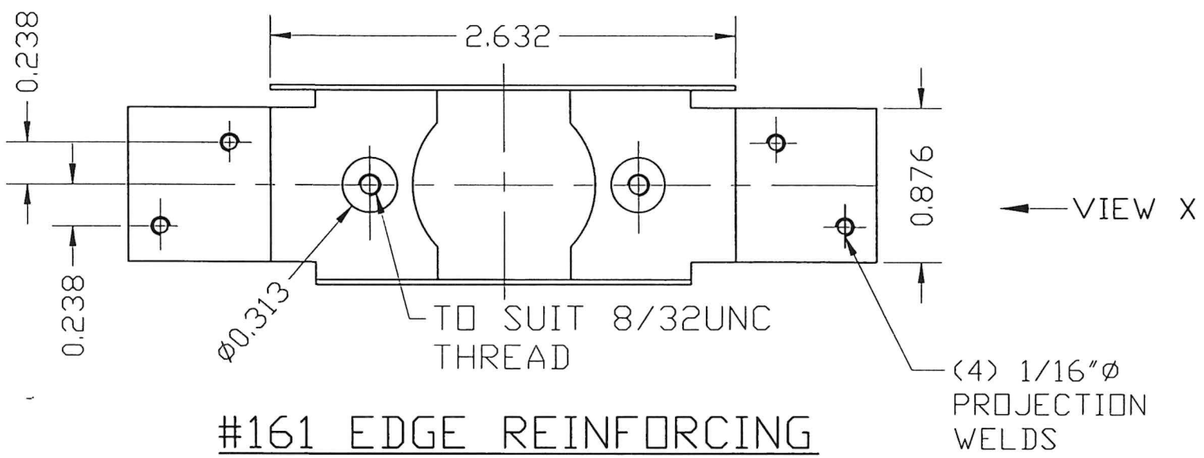

VIEW X

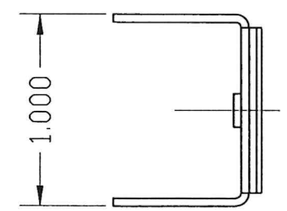

VIEW X

#161 EDGE REINFORCING
MAT: 0.078 SATINCOAT

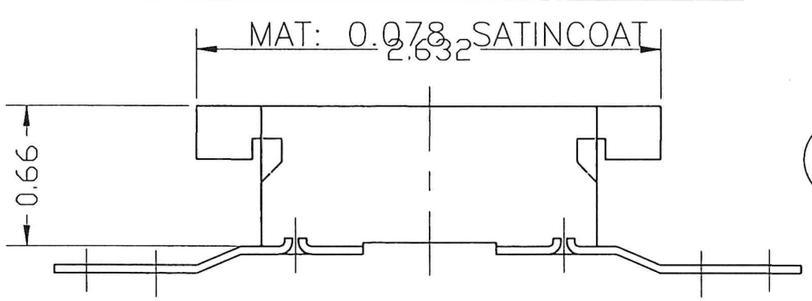

SECTION THROUGH EDGE REINFORCING

(24) #161 CYLINDRICAL LOCK AND DEAD BOLT REINFORCEMENT DETAIL

FLORIDA BUILDING CODE (HIGH VELOCITY HURRICANE ZONE)

WALTER A. TILLIT JR. LICENSE No. 44167 STATE OF FLORIDA PROFESSIONAL ENGINEER

P.E. SEAL/SIGNATURE/DATE

©2026 TILTECO, INC.

TILTECO INC.
TILLIT TESTING & ENGINEERING COMPANY
6355 N.W. 36th. St., Ste. 305, VIRGINIA GARDENS, Fl. 33166
Phone : (305)871-1530 . Fax : (305)871-1531
e-mail: tilteco@aol.com
CA-0006719
WALTER A. TILLIT Jr. P.E.
FLORIDA Lic. # 44167

DOUBLE & SINGLE SERIES LS18 OUTSWING COMMERCIAL STEEL DOOR W/SERIES "AS" 16 GAGE STEEL FRAME LOUVERED ASSEMBLIES.

DAYBAR INDUSTRIES LTD
50 WEST DRIVE, BRAMPTON, ON CANADA, L6T 2J4
TEL: 905 625-8000
FAX: 905 625-4204

REV. No	DESCRIPTION	DATE	REV. No	DESCRIPTION	DATE
1	OLD 23-180	08/04/2026	3		
2			4		

W.H.
DRAWN BY

08/04/2026
DATE

26-242
DRAWING No

SHEET 16 OF 19

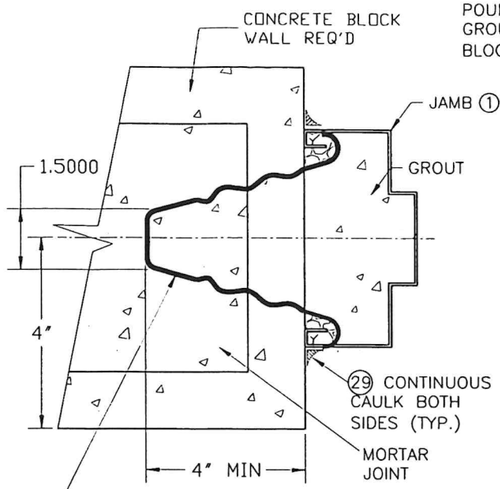

DETAIL #21
WIRE ANCHOR (6) INSTALLATION TO MASONRY WALLS

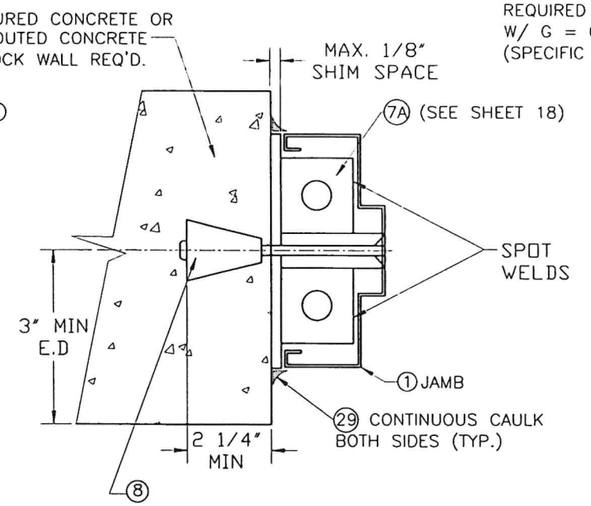

DETAIL #22
INSTALLATION OF UCAN SLEEVE ANCHORS (8) TO MASONRY WALLS

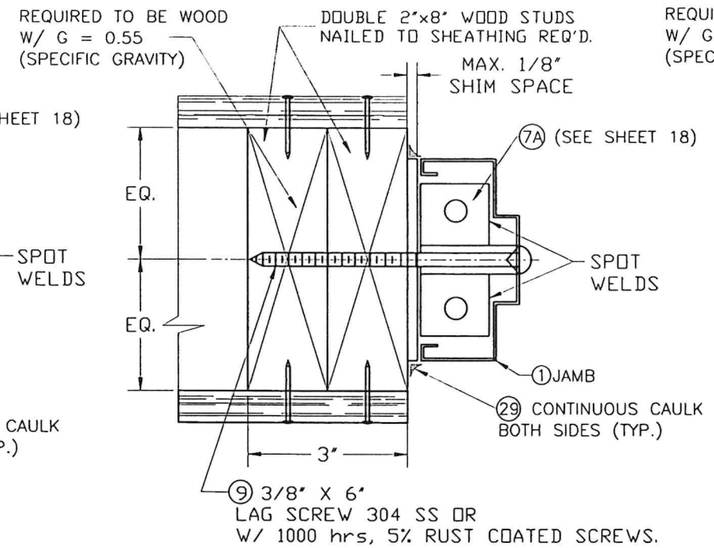

DETAIL #22A
INSTALLATION OF 3/8"Ø LAG SCREW (9) TO WOOD FRAME WALLS

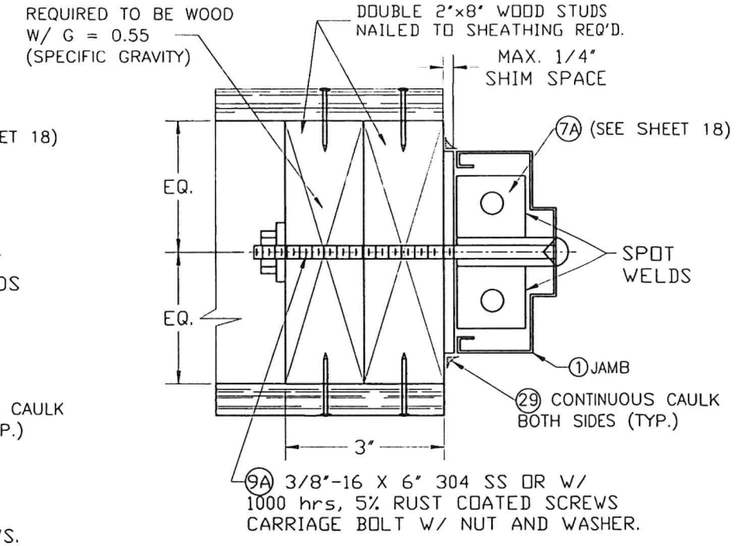

DETAIL #22B
INSTALLATION OF 3/8"Ø CARRIAGE BOLT (9A) TO WOOD FRAME WALLS

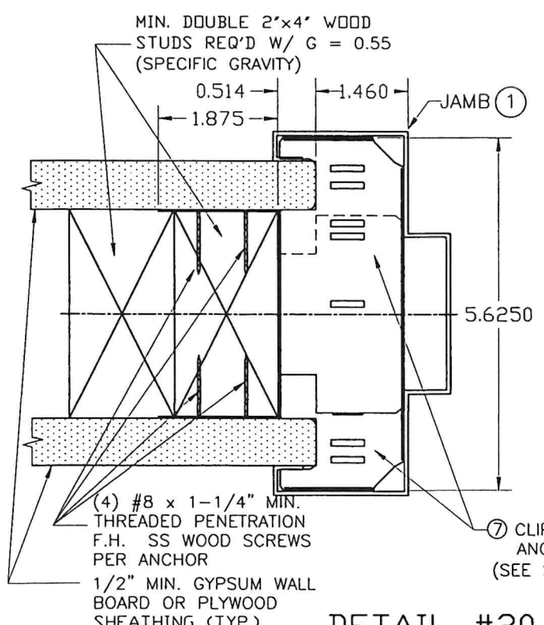

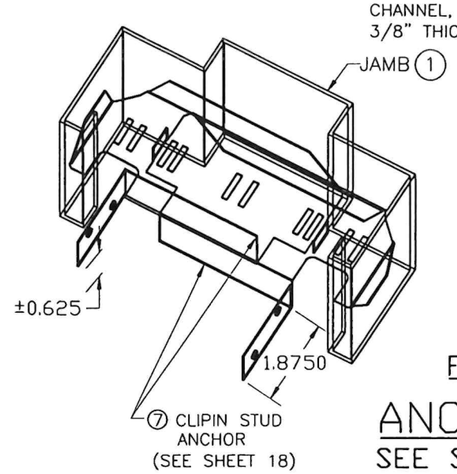

DETAIL #20
INSTALLATION OF 2 PIECE COMBINATION STUD ANCHOR (7) INTO WOOD FRAME WALLS

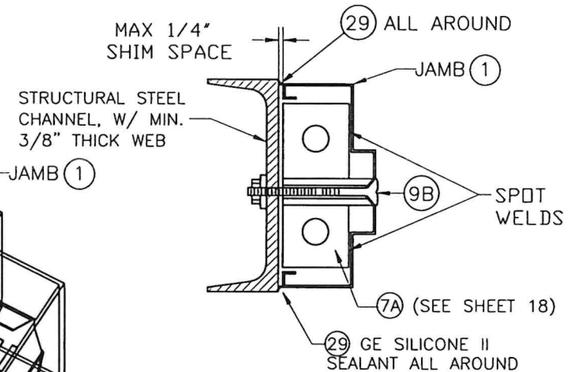

DETAIL #23A
INSTALLATION OF 3/8Ø F.H. M.S. (9B) TO STEEL CHANNEL

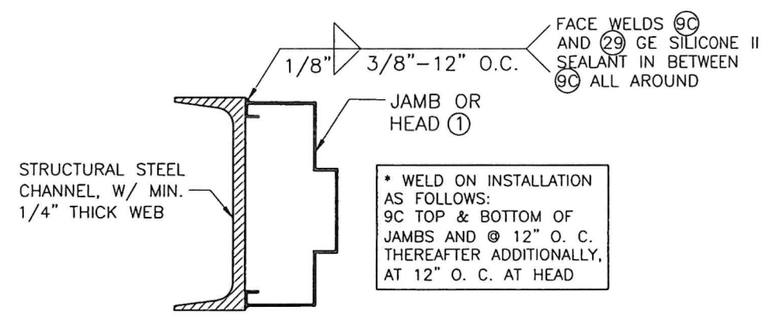

DETAIL #23B
INSTALLATION OF JAMB (1) TO STEEL CHANNEL THRU WELDING (9C)

ANCHOR DETAILS:
SEE SCHEDULE ON SHEET 18

FLORIDA BUILDING CODE (HIGH VELOCITY HURRICANE ZONE)

WALTER A. TILLIT JR. LICENSE No. 44167 STATE OF FLORIDA PROFESSIONAL ENGINEER

2/2026

P.E. SEAL/SIGNATURE/DATE

©2026 TILTECO, INC.

TILTECO INC.
TILLIT TESTING & ENGINEERING COMPANY
6355 N.W. 36th. St., Ste. 305, VIRGINIA GARDENS, Fl. 33166
Phone : (305)871-1530 . Fax : (305)871-1531
e-mail: tilteco@aol.com
CA-0006719
WALTER A. TILLIT Jr. P.E.
FLORIDA Lic. # 44167

DOUBLE & SINGLE SERIES LS1B OUTSWING COMMERCIAL STEEL DOOR W/SERIES "AS" 16 GAGE STEEL FRAME LOUVERED ASSEMBLIES.

DAYBAR INDUSTRIES LTD
50 WEST DRIVE, BRAMPTON, ON CANADA, L6T 2J4
TEL: 905 625-8000
FAX: 905 625-4204

REV. No	DESCRIPTION	DATE	REV. No	DESCRIPTION	DATE
1	OLD 23-180	08/04/2026	3		
2			4		

W.H.
DRAWN BY

08/04/2026
DATE

26-242
DRAWING No

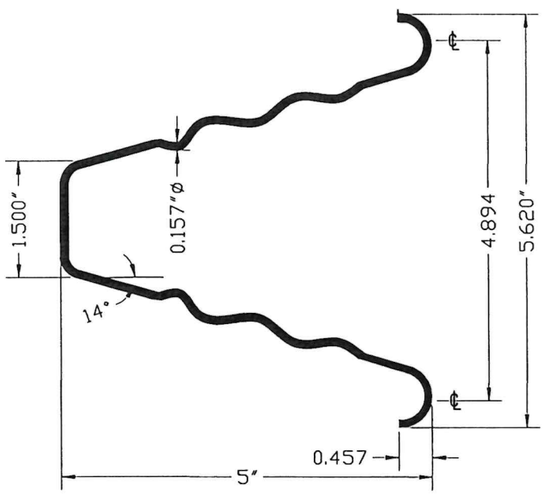

⑥ WIRE ANCHOR FOR DETAIL #21/17

STEEL WIRE ANCHORS
(0.157" DIA, 9 1/2" LONG) IN HORIZ.
Fu Min.=95.9 Ksi, Fy Min.=40.2 Ksi
SEE B.O.M. ON SHEET 19.

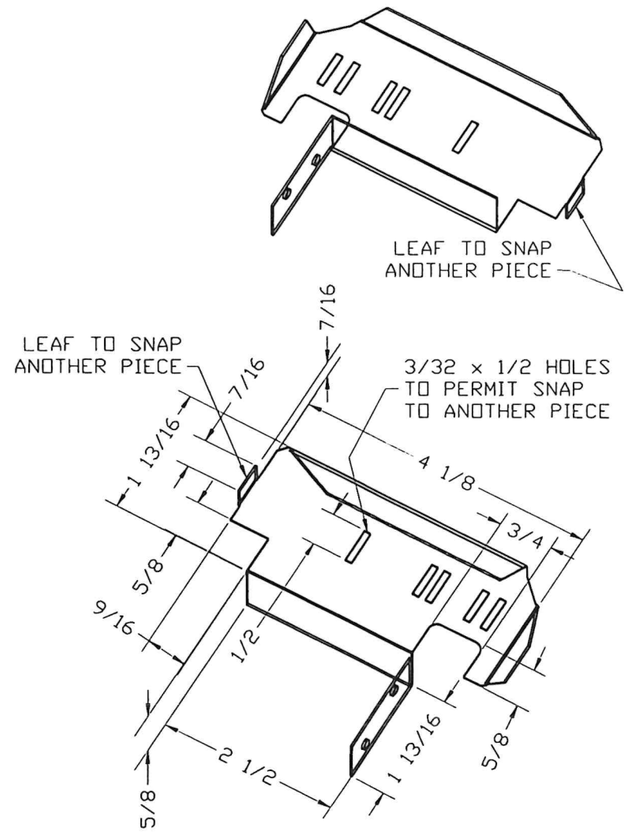

⑦ 2 PIECES COMBINATION STUD ANCHOR FOR DETAIL #20/17

CLIPIN STUD ANCHOR MATERIAL:
GAUGE 20 (0.035) ASTM A-653,
A-60 GALVANNEALED STEEL.
SEE B.O.M. ON SHEET 19.

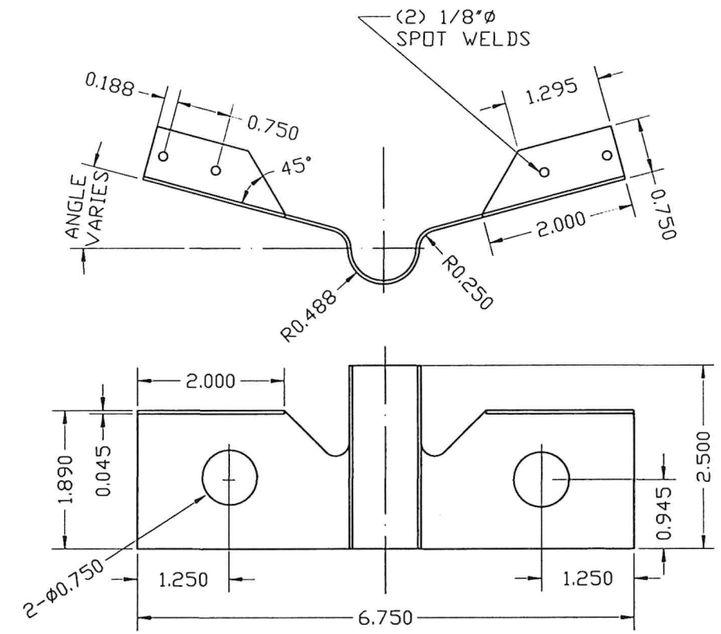

7A EMA BUTTERFLY ANCHOR (PART #PT1-008) FOR DETAILS 22/17, 22A/1722B/17 & 23A/17

MATERIAL: 18 GA SATIN COAT

FLORIDA BUILDING CODE (HIGH VELOCITY HURRICANE ZONE)

WALTER A. TILLIT JR. LICENSE No. 44167 STATE OF FLORIDA PROFESSIONAL ENGINEER

P.E. SEAL/SIGNATURE/DATE

©2026 TILTECO, INC.

TILTECO INC.
TILLIT TESTING & ENGINEERING COMPANY
6355 N.W. 36th. St., Ste. 305, VIRGINIA GARDENS, Fl. 33166
Phone : (305)871-1530 . Fax : (305)871-1531
e-mail: tilteco@aol.com
CA-0006719
WALTER A. TILLIT Jr. P.E.
FLORIDA Lic. # 44167

DOUBLE & SINGLE SERIES LS18 OUTSWING COMMERCIAL STEEL DOOR W/SERIES "AS" 16 GAGE STEEL FRAME LOUVERED ASSEMBLIES.

DAYBAR INDUSTRIES LTD
50 WEST DRIVE, BRAMPTON, ON CANADA, L6T 2J4
TEL: 905 625-8000
FAX: 905 625-4204

REV. No	DESCRIPTION	DATE	REV. No	DESCRIPTION	DATE
1	OLD 23-180	08/04/2026	3		
2			4		

W.H.
DRAWN BY

08/04/2026
DATE

26-242
DRAWING No

SHEET 18 OF 19

BILL OF MATERIALS:

ITEM	QTY	DESCRIPTION	MATERIAL	SIZE AND SPEC'S
1	1	16 GAUGE JAMB/ HEAD FRAME SERIES 'AS'	16 GAUGE .058 MINIMUM. ALL COMPONENTS OF THIS ITEM, i.e., HEAD, JAMBS, REINFORCEMENTS AND ANCHORS ARE COMMERCIAL GALVANIZED STEEL (TYPE B), ASTM A653/A653M, COATING DESIGNATION A40, KNOWN COMMERCIALLY AS PAINTABLE GALVANNEAL W/ MIN. TENSILE STRENGTH 52 KSI, MIN. YIELD STRENGTH 45 KSI, ELONGATION 40%.	5 3/4" DEPTH X 2" FACE X .058" MIN THICK (SEE SHEET 9)
1A	1	16 GAUGE OPTIONAL HEAD FRAME SERIES 'AS'	SAME AS ITEM 1	5 3/4" DEPTH X 4 3/8" FACE X .058" MIN THICK (SEE SHEET 9)
1B	1	SURFACE STRIKE REINFORCING	12 GAGE GALVANNEAL STEEL	12 GAGE (0.097" MIN.) x 1.500" x 11.875" LONG, SEE DETAIL ON SHEET 9.
2	1	18 GAUGE FLUSH/EMBOSSED DOOR COMMERCIAL W/ CORE (20)	18 GAUGE .045 MINIMUM. ALL COMPONENTS OF THIS ITEM, i.e., FACE SHEETS, INTERNAL COMPONENTS AND REINFORCEMENTS ARE GALVANIZED STEEL CONFORMING TO ASTM A924, TO ASTM A653/A653M, COMMERCIAL STEEL (TYPE B), COATING DESIGNATION A40, KNOWN COMMERCIALLY AS PAINTABLE GALVANNEAL W/TENSILE STRENGTH 60 KSI, AND YIELD STRENGTH 45 KSI, ELONGATION 40%.	1 3/4" THICK X (.045 MIN), SEE SHEET 6.
3	3	8 GAUGE DOOR HINGE REINFORCING	STEEL	1 1/4" X 10" X 8 GAUGE
4	3	8 GAUGE FRAME HINGE REINFORCING	STEEL	1 1/2" X 8 3/4" X 8 GAUGE
5	1	STRIKE REINFORCING (FRAME)	STEEL	1 3/8" X 7 5/16" X 14 GAUGE (.072 MIN)
6	AS REQ'D	WIRE MASONRY FRAME ANCHORS	STEEL W/ MIN. YIELD STRENGTH = 40.2Ksi AND MIN. TENSILE STRENGTH = 95.9 Ksi	9 1/2" LONG X 0.157" MIN. DIAMETER.
7	AS REQ'D	CLIPIN STUD ANCHORS (2 PIECE COMBINATION)	STEEL, ASTM A-653, A-60 GALVANNEAL.	MUST COMPLY W/ FLORIDA BUIILDING CODE SECTION 1711.1.2.1, 1711.1.2.2 & 1711.1.2.3.
7A	AS REQ'D	EMA BUTTERFLY ANCHOR (PART #PT1-008)	STEEL	18 GAUGE STEEL ,SATIN COAT.
8	AS REQ'D	EMA ANCHOR BOLTS	STEEL	3/8" X 5" S.S. U-CAN SLEEVE ANCHOR. SEE SHEET 17 FOR SPECS.
9	AS REQ'D	LAG SCREW	STEEL, W/ Fy = 45,000 psi.	3/8" x 6". SEE SHEET 17 FOR SPECS.
9A	AS REQ'D	CARRIAGE ANCHOR BOLT	STEEL, W/ Fy = 45,000 psi.	3/8"-16 X 6" STEEL CARRIAGE. BOLT C/W NUT AND WASHER, PER ASTM A-307
9B	AS REQ'D	F.H. M.S. TO STEEL CHANNEL THROUGH BOLTING	STEEL, W/ Fy = 45,000 psi.	3/8" X 3 1/2" STEEL F.H. M.S., PER ASTM A-307
9C	AS REQ'D	STEEL CHANNEL WELDING	STEEL, E60XX ELECTRODE	WELD ON INSTALLATION, MIN. 1/8"x3/8" STITCH WELD
10	3	HINGES-HAGER BB1279, BB1168HD OR STANLEY FBB179, FBB168	STEEL	4.5" X 4.5" STANDARD WEIGHT (.134 THICK), ATTACHED TO FRAME W/(4) 12-24x1/2" FHMS.
11	1	RIM EXIT: VON DUPRIN 98/99L X CYC X TRIM	AS PER MANUFACTURER'S CATALOG	RIM EXIT ATTACHED TO DOOR W/(4) 1/4-20x1" MS.
12	1	MORTISE LOCK: SCHALGE-L9000 SERIES W/ DEAD BOLT	AS PER MANUFACTURER'S CATALOG	MORTISE LOCK ATTACHED W/(2) #12-24x1/2" SREWS.
13	1	CYLINDRICAL LOCK: - SCHLAGE D SERIES	AS PER MANUFACTURER'S CATALOG	ATTACHED TO STRIKE PLATE W/(2) 12-24x1/2" SCREWS.
14	1	DEAD BOLT: - SCHLAGE B SERIES	AS PER MANUFACTURER'S CATALOG	ATTACHED TO STRIKE PLATE W/(2) 8-32x1/2" SCREWS
15	1	VON DUPRIN #9954 REMOVABLE MULLION	0.125" THICK A 500 GRADE B STEEL	SECURED TO 499 STRIKE PLATE WITH (8) 5/16"Ø-18x3/4"(MIN.) MACHINE SCREWS.
15A	1	WEATHER STRIP (NATIONAL GUARD PRODUCTS #120NA)	NEOPRENE	SECURED WITH DOUBLE ROW OF #6x1/2" SMS SCREWS @ 1" FROM EACH END AND 4" O.C. (AS PREDRILLED BY MANUFACTURER)
16	1	THRESHOLD (NATIONAL GUARD PRODUCTS #950NA)	EXTRUDED ALUMINUM (6063-T5 ALLOY)	5" x 0.500" x 0.080" THICK, ATTACHED TO SLAB W/ 3/16"x 1 3/4" F. H. TAPCON ANCHORS W/ 1 1/4" MIN. EMBEDMENT LOCATED @ 2 3/4" FROM EACH END AND 10" O. C.
17	1	4 1/2" HINGE BAR REINFORCING FOR DOOR	GALVANNEAL STEEL	1.25" x 10" x 0.134" MIN. THICK
18	1	DOOR SURFACE BOLT REINFORCING	GALVANNEAL STEEL	14 GAGE (0.074") x 1.687" x 3.500" x 9.000" LONG.
19B	AS REQ'D	MODEL 1500-A LOUVER & SECURITY GRILLE	AS PER MANUFACTURER (AIR LOUVERS, INC.)	24" x 24" (MAX.), SEE SHEET 8 FOR DETAILS & COMPONENTS.
20	1	0.75" THICK DOOR CORE ADHERED TO 2 W/ HELMI BOND #8320-1, OR JOWA THERM 609.30 OR DURAL UH-1077.	0.75" THICK DOOR CORE APPROVED EXPANDED POLYSTYRENE SOLID SLAB RIGID BOARD TYPE 1.0 PCF, OR 3/4" CELL AXXOR 117 gr/m^2 WEIGHT PAPER HONEYCOMB OR 1.5PCF APPROVED POLYURETHANE OR 12.5PCF MINERAL BOARD.	BONDED TO FACE SHEET AS DESCRIBED.
21	4	8" LONG # 275 D HAGER SURFACE BOLT	STEEL W/ US26D FINISH	ENGAGED TO THE DOOR AT TOP AND BOTTOM TO HEADER & THRESHOLD RESPECTIVELY & FASTENED TO DOOR W/ (4) #10-24 x 1 1/2" THRU BOLT EACH CONNECTION.
22	AS REQ'D	THRESHOLD ANCHORS	3/16" x 1 3/4" STEEL.	1/4"Ø ULTRACON+ OR ULTRACON SS4 BY DEWALT.
23	1	MORTISE LOCK AND RIM PANIC DEVICE REINFORCEMENT	0.074" MIN. THICK GALVANNEAL STEEL	SEE SHEET 15 FOR SUBCONJUNTS
24	1	#161 CYLINDRICAL LOCK AND DEAD BOLT REINFORCEMENT	SATIN COAT STEEL	SEE SHEET 16 FOR DETAILS
25	1	DOOR SURFACE CLOSER REINFORCEMENT	0.074" MIN. THICK GALVANNEAL STEEL	14 GAGE (0.074" MIN.) x 3 1/2" x 1.6875 x 16.250" LONG.
26	1	DOOR TOP/ BOTTOM END CHANNEL	16 GAGE GALVANNEAL STEEL	16 GAGE (0.057" MIN.) x 1.8125" x 1.4375.
27	1	'Z' ASTRAGAL	0.075" MIN. THICK A 500 GRADE B STEEL	0.075" MIN. THICK x 2.00" x (2)0.625" x 84" LONG.
28	1	DOOR SNAP IN TOP CAP	20 GAGE GALVANNEAL STEEL ASTM A-653, A-60	SEE SHEET 14 FOR SIZES
29	AS REQ'D	CAULKING: GE SILICONE II	N/A	
30	AS REQ'D	995 DOW CORNING STRUCTURAL SILICONE	N/A	

FLORIDA BUILDING CODE (HIGH VELOCITY HURRICANE ZONE)

WALTER A. TILLIT JR. LICENSE No. 44167 STATE OF FLORIDA PROFESSIONAL ENGINEER

P.E. SEAL/SIGNATURE/DATE

©2026 TILTECO, INC.

TILTECO INC.
TILLIT TESTING & ENGINEERING COMPANY
6355 N.W. 36th. St., Ste. 305, VIRGINIA GARDENS, Fl. 33166
Phone : (305)871-1530 , Fax : (305)871-1531
e-mail: tilteco@aol.com
CA-0006719
WALTER A. TILLIT Jr. P.E.
FLORIDA Lic. # 44167

DOUBLE & SINGLE SERIES LS18 OUTSWING COMMERCIAL STEEL DOOR W/SERIES "AS" 16 GAGE STEEL FRAME LOUVERED ASSEMBLIES.

DAYBAR INDUSTRIES LTD
50 WEST DRIVE, BRAMPTON,
ON CANADA, L6T 2J4
TEL: 905 625-8000
FAX: 905 625-4204

REV. No	DESCRIPTION	DATE	REV. No	DESCRIPTION	DATE
1	OLD 23-180	08/04/2026	3		
2			4		

W.H.
DRAWN BY

08/04/2026
DATE

26-242
DRAWING No

SHEET 19 OF 19